IAC 1701.5, as submitted by Illinois on May 22, 1987, are disapproved to the extent that they expand the "needed for and adjacent" test to allow claims of valid existing rights for lands for which the applicant obtained the requisite property rights after August 3, 1977.

[FR Doc. 89-80 Filed 1-3-89; 8:45 am]

BILLING CODE 4310-05-M

Bureau of Land Management

43 CFR Public Land Order 6695

[AK-932-09-4214-10; A-030682]

Partial Revocation of Public Land Order No. 1345, as amended, for Selection of Land by the State of Alaska; Alaska

AGENCY: Bureau of Land Management, Interior.

ACTION: Public land order.

SUMMARY: This order revokes a public land order (PLO) insofar as it affects 140 acres of public land withdrawn for military purposes. The land is no longer needed for the purpose for which it was withdrawn. This action will also classify the land as suitable for selection by the State of Alaska, if such land is otherwise available. The land will remain closed to all other forms of appropriation and disposition under the public land laws, including the mining and mineral leasing laws, pursuant to PLO No. 5187.

EFFECTIVE DATE: January 4, 1989.

FOR FURTHER INFORMATION CONTACT: Sandra C. Thomas, BLM Alaska State Office, 701 C Street, Box 13, Anchorage, Alaska 99513, 907-271-3342.

By virtue of the authority vested in the Secretary of the Interior by Section 204 of the Federal Land Policy and Management Act of 1976, 90 Stat. 2751; 43 U.S.C. 1714, and by section 17(d)(1) of the Alaska Native Claims Settlement Act, 85 Stat. 708 and 709; 43 U.S.C. 1616(d)(1), it is ordered as follows:

1. Public Land Order No. 1345, as amended, is hereby revoked insofar as it affects the following described land:

Seward Meridian, Alaska

T. 15 N., R. 4 W.,
Sec. 1, lot 8;
Sec. 12, NE¼NE¼NE¼,NE¼NW¼NE¼NE¼,S½NW¼NE¼NE¼, S½NE¼NE¼, SE¼SE¼NW¼NE¼, E½E½SW¼NE¼, SE¼NE¼, N½NE¼SE¼,N½SW¼NE¼SE¼, SE¼SW¼NE¼SE¼, SE¼NE¼SE¼, E½NE¼NW¼SE¼, and N½NE¼SE¼SE¼.

The area described contains 140 acres.

2. Subject to valid existing rights, the land described above is hereby classified as suitable for and opened to selection by the State of Alaska under either the Alaska Statehood Act of July 17, 1958, 72 Stat. 339, et seq.; 48 U.S.C. prec. 21, or section 906(b) of the Alaska National Interest Lands Conservation Act, 94 Stat. 2371, 2437-2438; 43 U.S.C. 1635.

3. As provided by Section 6(g) of the Alaska Statehood Act, the State of Alaska is provided a preference right of selection for the land described above, for a period of ninety-one (91) days from the date of publication of this order, if the land is otherwise available. Any of the land described herein that is not selected by the State of Alaska will continue to be subject to the terms and conditions of PLO No. 5187, and any other withdrawal of record.

J. Steven Griles,

Assistant Secretary of the Interior.

December 21, 1988.

[FR Doc. 89-15 Filed 1-3-89; 8:45 am]

BILLING CODE 4310-JA-M

43 CFR Public Land Order 6696

[CO-930-09-4214-10; C-48465]

Withdrawal of Public Lands and Reserved Minerals for Protection of Scenic and Recreational Values in the Ruby Canyon of the Colorado River; Colorado

AGENCY: Bureau of Land Management, Interior.

ACTION: Public land order.

SUMMARY: This order withdraws 7,658 acres of public lands from surface entry and mining and 244 acres of public minerals from mining for a period of 5 years. This will protect the recreational and scenic values of this segment of the Colorado River pending final decision on a Wild and Scenic River Regulation. The lands have been and remain open to mineral leasing.

EFFECTIVE DATE: January 4, 1989.

FOR FURTHER INFORMATION CONTACT: Doris E. Chelius, BLM, Colorado State Office, 2850 Youngfield Street, Lakewood, Colorado 80215, 303-236-1768.

By virtue of the authority vested in the Secretary of the Interior by section 204 of the Federal Land Policy and Management Act of 1976, 90 Stat. 2751; 43 U.S.C. 1714, it is ordered as follows:

1. Subject to valid existing rights, the following described public lands are hereby withdrawn from settlement, sale, location or entry under the general land laws, including the United States mining laws (30 U.S.C. Ch. 2), but not from leasing under the mineral leasing laws for protection of scenic and recreational values:

Ute Principal Meridian

T. 1 N., R. 3 W.,
Sec. 6, lots 6 and 8;
Sec. 7, lots 1, 2, and 6 thru 9;
Sec. 8, lot 3, and S½NE¼SW¼;
Sec. 9, lot 4;
Sec. 17, lot 4, S½NE¼, and SE¼NW¼;
Sec. 18, lot 1, N½NE¼ and NE¼NW¼.

Sixth Principal Meridian

T. 10 S., R. 103 W.,
Sec. 5, S½SW¼ and W½SW¼SE¼;
Sec. 6, SE¼SW¼ and S½SE¼;
Sec. 7, lots 1 thru 4, 7, 8, SE¼NE¼, W½NW¼, W½SE¼, and E½E½SE¼;
Sec. 8, lots 2, 3, 6, 7, and W½W½E½;
Sec. 15, lots 2 thru 9, S½N½NW¼, and E½SW¼SW¼;
Sec. 16, lots 1 thru 4, 6 thru 8, W½NW¼NE¼, SE¼NE¼NE¼, NW¼NE¼, N½NW¼, and N½SW¼SW¼;
Sec. 17, lots 2, 3, 5 thru 7, W½NW¼NE¼, S½NE¼, N½SW¼SW¼, and SE¼SE¼;
Sec. 18, lots 2, 8 thru 11, W½E½, E½E½NE¼, E½NE¼SE¼, and NE¼SE¼SE¼;
Sec. 19, lots 1, 3, 4, NW½SW¼NE¼, SE¼NW¼, NW¼SW¼, and N½NE¼SW¼;
Sec. 22, lots 5 thru 8, NE¼NW¼, E½SE¼NW¼, and E½NE¼SW¼;
Sec. 27, lot 1.
T. 10 S., 104 W.,
Sec. 12, E½E½E½;
Sec. 13, E½E½E½;
Sec. 23, lots 1 thru 4, E½SW¼NE¼, and E½W½SE¼;
Sec. 24, lots 1 thru 9, NW¼NE¼, N½NW¼, E½SW¼, and N½SE¼;
Sec. 25, lots 1 thru 4, E½W½, and SW¼SW¼;
Sec. 26, lots 1 thru 7, E½NW¼NE¼, SW¼NE¼, and S½NW¼;
Sec. 27, lots 1 thru 9, S½NE¼, and SE¼NW¼;
Sec. 28, lots 1 thru 3, S½SE¼NE¼, and W½SE¼;
Sec. 32, lots 1 thru 7, NE¼SW¼, SE¼NW¼SW¼, and N½SE¼;
Sec. 33, lots 1 thru 12, NW¼NE¼, and E½SE¼NW¼;
Sec. 34, N½N½NE¼, N½NE¼NW¼, W½NW¼, and NW¼SW¼;
Sec. 35, N½NW¼NE¼ and N½N½NW¼.
T. 11 S., R. 104 W.,
Sec. 3, lots 3 and 4;
Sec. 4, lots 1 thru 4, S½NW¼, and SW¼;
Sec. 5, lot 1, SE¼NE¼, E½SE¼SW¼, N½SE¼, and SE¼SE¼;
Sec. 7, lots 1 thru 4;
Sec. 8, E½NE¼, N½NW¼, SW¼NW¼, and S½;
Sec. 9, NW¼NW¼, W½SW¼NW¼, and W½W½SW¼.

The areas described aggregate approximately 7,657.73 acres of public lands in Mesa County.

2. Subject to valid existing rights, the reserved mineral interests in the following identified privately owned lands are hereby withdrawn from the

United States mining laws (30 U.S.C. Ch. 2) but not the mineral leasing laws:

Ute Principal Meridian

T. 1 N., R. 3 W.,
Sec. 7, lots 3, 4 and 5;
Sec. 8, lots 2, 4, 5 and 6;

Sixth Principal Meridian

T. 11 S., R. 104 W.,
Sec. 5, E½SW¼NE¼.

The areas described aggregate approximately 244.04 acres of reserved public domain minerals in Mesa County.

3. The withdrawal made by this order does not alter the applicability of those public land laws governing the use of the lands under lease, license, or permit, or governing the disposal of their mineral or vegetative resources other than under the mining laws.

4. This withdrawal will expire 5 years from the effective date of this order unless, as a result of a review conducted before the expiration date pursuant to section 204(f) of the Federal Land Policy and Management Act of 1976, 43 U.S.C. 1714(f), the Secretary determines that the withdrawal shall be extended.

J. Steven Griles,

Assistant Secretary of the Interior.

December 21, 1988.

[FR Doc. 89–14 Filed 1–3–89; 8:45 am]

BILLING CODE 4310–JB–M

DEPARTMENT OF TRANSPORTATION

Coast Guard

33 CFR Part 155

46 CFR Parts 1, 10, 12, 15, 26, 30, 31, 35, 151, 157, 175, 185, 186, and 187

[CGD 81–059]
RIN 2115–AA64

Licensing of Maritime Personnel

AGENCY: Coast Guard, DOT.

ACTION: Final rule.

SUMMARY: The Coast Guard is amending the regulations concerning the licensing of maritime personnel and the manning of vessels. This rule modifies the regulations contained in Parts 10, 12, 15, 30, 31, 35, 151, and 185 of Title 46 Code of Federal Regulations (CFR) and Part 155 of Title 33 CFR concerning the licensing of individuals, the registration of staff officers, and the manning of vessels. This final rule combines and modifies the regulations contained in rulemaking dockets CGD 81–059 and CGD 81–059b published as Interim Final Rules on October 16, 1987 (52 FR 38614 and 52 FR 38658, respectively). New limited tonnage licenses are added for Great Lakes and inland service. Provision is made for master and mate licenses with a river route. The renewal requirements are modified to allow license renewal by mariners who are not actively employed under the authority of their licenses. The license renewal requirement for a valid cardiopulmonary resuscitation course certificate has been withdrawn. The authority for masters and mates to act as tankerman, which appears throughout 46 CFR and in 33 CFR Part 155, is modified to reflect the broader use of the terms master and mate. The list of examination subjects for engineering licenses has been completely revised to more clearly indicate the material covered in each examination. Minor modifications to the topics for deck licenses have also been made.

EFFECTIVE DATE: These changes to the regulations are effective February 3, 1989.

FOR FURTHER INFORMATION CONTACT: LCDR Gerald D. Jenkins, Project Manager, Office of Marine Safety, Security and Environment Protection, (G–MVP), phone (202) 267–0224.

SUPPLEMENTARY INFORMATION: The Coast Guard published an Advance Notice of Proposed Rulemaking (ANPRM) in October of 1981 (46 FR 53624) which outlined the basic philosophy and concepts for this project. The Coast Guard received approximately 75 written comments to the docket on that ANPRM. A Notice of Proposed Rulemaking (NPRM) was published on August 8, 1983 (48 FR 35920). Over 10,000 copies of this notice were mailed out to the public and 19 public meetings were held around the country. This notice elicited over 700 written comments and thousands of telephone inquiries. A Supplemental Notice of Proposed Rulemaking (SNPRM) was published on October 24, 1985 (50 FR 43316), after which the Coast Guard held six public hearings. On October 16, 1987, an Interim Final Rule (IFR) was published (52 FR 38614). Ten thousand reprints of this IFR were distributed to interested parties. While the majority of the regulations became effective December 1, 1987, the IFR provided for an additional 90 day comment period. Since 1981, a total of over 1490 written comments have been received and docketed on this project. Comments received in response to the IFR, and changes reflected in the final rule, are discussed later in this preamble. The Coast Guard also published an Interim Final Rule on October 16, 1987 (52 FR 38658) which reformatted and reorganized the regulatory requirements for pilots' licenses to make them consistent with the remainder of the licensing regulations (CGD 81–059b). Four comments were received and have been addressed in the preamble. No changes have been made to that rulemaking. The comments received in response to the Interim Final Rule on the licensing and manning regulations for mobile offshore drilling units (CGD 81–059a, 52 FR 38660), also published on October 16, 1987, are still being evaluated, and a final rule will be published at a later date.

Drafting Information

The principal drafters of this Final Rule are: LCDR Gerald D. Jenkins, Office of Marine Safety, Security and Environment Protection, and CDR Gerald A. Gallion, Office of Chief Counsel.

Background

This final rule implements the provisions of Pub. L. 96–378 and the Port and Tanker Safety Act of 1978. Pub. L. 96–378 discussed the establishment of career patterns, service and qualifying requirements, and the substitution of training time and courses of instruction for sea service. The Port and Tanker Safety Act of 1978 required improved pilotage standards, standards relating to qualification for licenses by the use of simulators, minimum health and physical fitness criteria, and periodic retraining and special training for upgrading positions.

The structure and basic qualifications for licenses have been designed to conform to the provisions of the International Convention on the Standards of Training, Certification and Watchkeeping for Seafarers (STCW), 1978. While the United States has not yet ratified this Convention, the United States delegation was an active participant in the drafting of the Convention and has participated in ensuing interpretations of the Convention. The Convention has been ratified by a sufficient number of maritime nations, and entered into force internationally in April, 1984. Having the structure and basic qualifications of licenses issued by the Coast Guard in general conformance with the Convention will facilitate their acceptance by the countries that have ratified the STCW.

Public Law 98–89 of August 20, 1983, revised and consolidated certain laws relating to vessels and merchant seamen contained in Title 46, United States Code. These changes also necessitated some amendments to the licensing and manning regulations.

For some time the Coast Guard had planned to revise the licensing and manning regulations due to their complexity. This final rule maintains the high U.S. mariner licensing standards while simplifying the license structure and making the regulations easier to use.

Discussion of Comments

The comments received were generally supportive of the regulations published in the Interim Final Rule. Specific areas which received substantive comments or are modified based on Coast Guard experience under the interim rules are discussed in the same format presented in the preamble to the Supplemental Notice and the Interim Final Rule. This final rule was prepared after considering all comments received.

Specific Comment Areas

1. *Professional requirements for license renewal:* There were 97 comments objecting to the service, training or examination requirements for the renewal of a license. The regulations provide four options whereby a mariner can demonstrate continuing proficiency. The flexibility provided by these options will allow nearly all mariners to renew their licenses. This portion of the regulations is virtually unchanged from the 1985 Supplemental Notice of Proposed Rulemaking.

The requirements for renewal contained in this rulemaking are in keeping with the provisions of the International Convention on Standards of Training, Certification and Watchkeeping for Seafarers, 1978 (STCW). Although the United States is not signatory to the Convention, it has been ratified by sufficient maritime nations and came into force on April 28, 1984.

Consequently, in order for U.S. licenses to be accepted by nations signatory to STCW and for U.S. vessels to operate in foreign ports without impediment, it is necessary that our regulations substantially comply with the provisions of the Convention. Regulations II/5 and III/5 of the Annex to STCW set the "mandatory minimum requirements to ensure the continued proficiency and up-dating of knowledge" for deck and engineering officers. These provisions in STCW and the renewal requirements in the final rule are essentially the same.

The Final Rule does provide a means by which a mariner can continue to renew a license without satisfying these professional requirements (paragraph 2).

2. *Two-tier license renewal structure:* To satisfy the intent of the International Convention on Standards of Training, Certification and Watchkeeping for Seafarers, 1978 (STCW) regulations II/5 and III/5, which require administrations to "ensure continued proficiency" of merchant marine officers, the revision to Part 10 placed some additional requirements on applicants for license renewal. Mariners not currently sailing or employed in a related industry have expressed concern about their ability to meet the new requirements listed in 46 CFR 10.209(c). To allay such concerns, and to maintain a large pool of licensed mariners for national security reasons, a two-tier license renewal system is being implemented with the final rule. Under the two-tier structure, applicants that cannot meet, or elect not to meet, the professional requirements of § 10.209(c) may renew their licenses by following the procedure detailed in 46 CFR 10.209(g). Any license renewed under paragraph (g) is endorsed to prohibit service under the authority of the license until all of the renewal requiremetns of § 10.209 are met.

3. *Cardiopulmonary resuscitation training:* There were 39 comments objecting to the requirement for possession of a valid cardiopulmonary resuscitation (CPR) course certificate in order to renew a license. Certification in CPR has been a requirement for original license issuance for a number of years. Until publication in the Interim Final Rule, the requirement for CPR training has been well supported by comments on this rulemaking, with several recommending adoption as a renewal requirement. Since the Interim Rule was published, several comments challenged the wisdom of abandoning the safe navigation of the vessel in order to administer CPR. It is not expected that a licensed mariner will abandon the safe navigation of a vessel in order to administer CPR or other forms of first aid. However, circumstances are likely in which the vessel could be safely moored, or more than one qualified mariner would be onboard and available to provide assistance.

In view of the comments received, the requirements for a valid CPR card for license renewal is withdrawn. However, the requirement for a valid CPR card for an original license will be retained. The Coast Guard considers an awareness of CPR procedures to be a significant portion of overall first aid proficiency.

4. *Great Lakes routes for deck licenses for vessels of 200 gross tons and less:* Three comments suggested the need for an operator of uninspected passenger vessels and master of vessels of not more than 100 gross tons with a Great Lakes route. The Coast Guard agrees, and has made provision in this final rule for the issuance of original licenses as master of vessels of not more than 100 gross tons and operator of uninspected passenger vessels with Great Lakes and inland routes. Both licenses require one year of qualifying service. At the suggestion of the Toledo Regional Examination Center, three months of the qualifying service must have been on the Great Lakes. The Great Lakes service is being required to ensure that individuals obtaining these limited tonnage licenses have the necessary experience to safely operate in that environment. Applicants will take the inland route license examination for the equivalent grade of license. Individuals converting small passenger vessel licenses with "waters other than ocean or coastwise" routes will normally receive inland routes. However, if the license holder can demonstrate any prior Great Lakes service, the license will convert to a Great Lakes and inland route.

The Coast Guard has decided to extend the three month Great Lakes service requirement to licenses as master or mate of vessels of not more than 200 gross tons with a Great Lakes and inland route. This is appropriate because of the similarities in the amount of required qualifying service and the nature of the service authorized by the license. If the Great Lakes service requirement cannot be satisfied, the license will be limited to the inland waters of the United States (excluding the Great Lakes).

The Coast Guard believes that this Great Lakes experience is unnecessary for higher tonnage licenses, because of the greater service and examination requirements.

5. *Addition of licenses for master/mate of Great Lakes and inland steam or motor vessels of not more than 500 gross tons:* The Coast Guard regional examination centers (RECs) located in the Pacific Northwest have recommended that provision be made for 500 gross ton master and mate licenses with an inland route. Large numbers of the 500 gross ton licenses for lakes, bays, and sounds (the comparable license under the old licensing system) have been issued at those RECs. Because of the demand for this size tonnage license, this final rule makes provision for master and mate licenses of not more than 500 gross tons with a Great Lakes and inland route.

6. *Master and mate of rivers:* Seventeen comments urged that a license limited to a rivers route be offered which would not require a demonstration of the chart navigation skills necessary for an inland route

license. Consequently, the final rule makes provision for master and mate licenses limited to rivers. The periods of required service are the same as required for a Great Lakes and inland license. License applicants will only be required to demonstrate proficiency in navigational instruments and chart skills which are necessary in river service.

7. *Uninspected fishing industry licenses:* The Final Rule makes provision for master and mate licenses of uninspected fishing industry vessels with a near coastal route. Several Coast Guard licensing officers and fishing vessel operators have urged that a fishing vessel license be offered which does not require proficiency in celestial navigation. The qualification requirements for a near coastal route are the same as for an ocean route, except that celestial navigation proficiency is not required.

The tonnage qualification guidelines have been revised to closely correspond with those for licenses authorizing service on inspected vessels of similar size. The system for tonnage computation promulgated in the Interim Final Rule was unreasonably lenient, permitting the qualification for 1,000 gross ton licenses using service on extremely small vessels, a result which the Coast Guard did not intend.

8. *Age limit reduction for limited master's licenses:* Numerous comments urged that the minimum age for a limited master's license be reduced to 18. Historically, the operation of such vessels is summer employment for students. Due to the restricted nature of the service authorized under the limited master's licenses issued to individuals for employment at formal camps, yacht clubs, etc., and the characteristic age of individuals normally employed in that service, the minimum age for these licenses has been lowered from 19 to 18 years.

9. *Exemption of certain limited licenses from first aid and CPR requirements:* Several comments dealt with the experience and training requirements for a license as limited master or limited operator of uninspected passenger vessels issued to individuals for employment at formal camps, yachts clubs, etc. The comments stated that the cumulative requirements of boating experience, first aid course completion, CPR course completion, and boating safety course completion were excessive to the needs of marine safety. The comments also contended that the cumulative requirements discouraged the students, who are normally the source of such seasonal employees, from seeking employment in jobs requiring these licenses. The Coast Guard concurs with these comments. Therefore, applicants for original licenses as limited master or limited operator of uninspected passenger vessels issued to individuals for employment at formal camps, yacht clubs, etc. will not be required to complete first aid and CPR courses, unless required by the Officer in Charge, Marine Inspection (OCMI). The operating areas authorized such license holders do not involve extended voyages or locations far removed from shoreside assistance. Generally, the craft will be in proximity to marinas, yacht clubs or formal camps, where assistance will be readily available if necessary. The OCMI will require this training where the geographic area over which service is authorized precludes obtaining first aid services within a reasonable time.

10. *Conversion of operator uninspected towing vessels licenses with an upon oceans not more than 200 miles offshore route:* The license as operator of uninspected towing vessels upon oceans not more than 200 miles offshore, issued under the regulations in effect prior to December 1, 1987, was not restricted to domestic service. That license authorizes service world wide within 200 miles of any coastline. However, the operator's license does not comply with the requirements of the STCW. To resolve this disparity and avoid the rescinding of any license authority presently granted, a restricted master's license will be issued to these individuals. At the time of renewal, or sooner where a need is demonstrated, that license will be converted to a license as *MASTER OF NEAR COASTAL MOTOR VESSELS OF LESS THAN 200 GROSS TONS (RESTRICTED TO UNINSPECTED TOWING VESSELS); ALSO OPERATOR OF UNINSPECTED TOWING VESSELS GREAT LAKES AND INLAND.* This practice will preserve the currently held license authority when converting the license. The uninspected towing vessel restriction can only be removed by acquiring the qualifying experience and successfully completing an examination for a master's license, e.g., master of not more than 200 or master of not more than 500 gross tons.

11. *Masters and mates serving as tankerman:* Comments identified an undesirable result of the Interim Final Rule in designating as master or mate many individuals previously designated as "operator." Title 46 CFR Part 12 (Certification of Seamen), Subchapter D (Tank Vessels), Subchapter O (Certain Bulk Dangerous Cargoes), and 33 CFR Subchapter O (Pollution), state that an individual holding a valid license as master, mate, pilot or engineer is allowed to serve as a tankerman. Since individuals holding the new license as master or mate of vessels of not more than 200 gross tons have not been required to demonstrate a knowledge of the pollution prevention regulations to the necessary level, and have not obtained the experience in bulk liquid transfer procedures required of a tankerman, this inadvertent increase in authority granted to lower level license holders has the potential for a serious degradation of marine safety.

Consequently, the regulations concerning the authority to serve as tankerman found in 46 CFR Subchapters B, D and O, and 33 CFR Subchapter O are amended in this Final Rule to indicate that only individuals having a valid license as master or mate of inspected, mechanically propelled vessels of more than 200 gross tons, pilot or engineer may serve as tankerman, in conformity with the intent of this rulemaking. For clearer presentation, these conforming amendments are placed at the end of this rulemaking.

Individuals with a license as master or mate of vessels not more than 200 gross tons may qualify for and receive a merchant mariner's document endorsed as tankerman by complying with the provisions of 46 CFR 12.20.

12. *Tankerman on towing vessels:* While clarifying the absence of authority for licensed masters and mates of not more than 200 gross tons to serve as tankermen, a correction is being made to § 31.15–5 of Title 46 CFR which purports to require a licensed officer or tankerman in the regular complement of a towboat crew towing an unmanned tank barge. This in effect establishes manning requirements for an uninspected vessel without legislative authority. This requirement is being withdrawn, as it has been determined not to be properly founded in the underlying statute.

13. *Service on the Inside Passage between Puget Sound and Cape Spencer, Alaska:* Section 10.430 has been modified to authorize the use of Great Lakes and inland or inland licenses on the sheltered waters of the Inside Passage between Puget Sound and Cape Spencer, Alaska. While these waters are outside the Boundary Line used to determine inland waters for licensing purposes, the Coast Guard has for a number of years classified these waters as lakes, bays and sounds for certain inspection, licensing and manning purposes. Service on these protected waters is creditable as inland service.

14. *Grandfather provision for service toward unlimited deck licenses:* Several comments indicated that the increase in minimum gross tonnage for an unlimited deck license was adversely affecting the career plans for individuals who had been working on vessels between 1,000 and 1,600 gross tons. Prior to December 1, 1987, this service would have been creditable towards an unlimited deck license, while the current regulations require service on vessels over 1,600 gross tons. Therefore, to reduce the impact of the Part 10 revision on mariners who have already obtained sea service toward an original license or upgrade, for applications received prior to July 1, 1989, service on vessels over 1,000 gross tons may be substituted for the required service of over 1,600 gross tons to obtain any gross tonnage endorsement on an unlimited master or mate license. For applications received after July 1, 1989 all service will be evaluated at face value.

15. *Physical examinations:* The preamble of the Interim Final Rule requested comments on the appropriateness of varying the frequency of physical examinations for mariners, depending on their age (preamble item #43). Eight comments were received: One commentor supported the proposal, and seven expressed opposition to a practice they viewed as illegal and discriminatory. The Coast Guard has not revised the physical examination frequency in this Final Rule. The Coast Guard will, however, continue to review the present physical requirements to determine their applicability today's maritime environment.

16. *Conversion of lakes, bays and sounds deck licenses:* The table of corresponding licenses published in the Interim Final Rule indicates that an individual with a deck license for lakes, bays, and sounds will receive a license for an inland route when converting to the new license structure. Comments pointed out that this will cause some individuals to lose the authority to continue their current employment. In keeping with the Coast Guard's stated policy of not removing any authority which a person had prior to the revision of the licensing regulations, the following guidelines will apply to conversion of master or mate lakes, bays and sounds licenses held by those individuals who have been serving upon other than inland waters. Individuals who are:

a. Currently licensed as master or mate lakes, bays and sounds;

b. Authorized service on waters which require the application of the COLREGS; and,

c. Able to show proof of employment under the authority of their license on waters which are not authorized for a master or mate inland;

may receive, at the time of conversion, a license as master or mate of inland steam and motor vessels with an additional endorsement as master or mate of steam and motor vessels upon the specific waters where authority is necessary to continue their employment.

17. *Deck service for engineering licenses:* The Interim Final Rule made provision for crediting some engineering experience towards limited deck licenses. Comments received indicated the reverse should also be allowed, since individuals assigned on deck of small vessels with limited crew size spend a significant number of hours performing work normally assigned to engineers on larger vessels. In recognition of this fact, provision has been made for crediting experience on deck toward a portion of the qualifying service for limited engineering licenses.

18. *Engineering examinations subject table:* For greater clarity, the Subjects for Engineering License table has been revised to use language which, through previous regulatory use, is familiar to the industry.

19. *Fire fighting training:* Comments suggested that the fire fighting training requirements should be tailored to the license title and the class of vessel upon which they will be utilized. The Coast Guard feels this is not practical because of the wide variety of fire fighting systems utilized by similar sized vessels in the same industries and the broad service authority granted by most licenses. The International Maritime Organization (IMO) Resolution A.437(XI), Training of Crews in Fire-Fighting, is being used by the Coast Guard as the guideline for course acceptance review. Only a small portion of the material covered by that resolution would not be applicable to vessels of all types.

20. *Required training for certain increases in the scope of a license:* Under the Interim Final Rule the requirement for certain deck license applicants to obtain a radar observer certificate, firefighting training, and able seaman qualification found in § 10.401(g) is not applicable to those who obtained their licenses prior to the implementation of the Interim Final Rule, unless the individual applied for a raise in grade. The same is true where firefighting training is required for other licenses. As an example, an individual currently holding a master, oceans, 500 gross ton license who applies for an unlimited third mate's license, and subsequently progresses to master, oceans, any gross tons would never be required to obtain this training, since no raise in grade is involved.

The Coast Guard believes that such a policy would adversely impact on marine safety, by permitting large increases in the scope of license authority without obtaining this training. Consequently, in keeping with the intent of this rulemaking, an applicant for a master's or mate's license, whether original, raise in grade, or increase in scope to a higher tonnage category, will, under this Final Rule, be required to obtain this training, if required for that license and not already completed. Likewise, an applicant for a license as an engineer or operator of uninspected towing vessels, oceans (domestic service), whether an original, raise in grade, or increase in scope (other than an increase in horsepower limitation for engineers) must meet the requirement in § 10.205(g) if he or she has not already done so.

21. *International Tonnage Convention:* The effects that the implementation of the International Convention on Tonnage Measurement of Ships, 1969, will have on licensing and manning regulations continues to be of concern to many individuals and organizations. Comments suggested that these regulations state that the domestic tonnage system will be used "forever" for licensing and manning purposes. However the final rule, like the Interim Final Rule, does not address the system of tonnage measurement, but rather presumes that the domestic tonnage system existing at the time of implementation of the regulations will be used. Public Law 99-509 (Oct. 8, 1986, 100 Stat. 1919.), Title V, section 5103(g) requires the Secretary of Transportation to submit to Congress before July 19, 1990, a study regarding the impact of applying the Convention tonnages to U.S. laws, the extent to which tonnage thresholds would have to be raised, and "a recommendation of the levels to which the tonnage thresholds in laws of the United States * * * should be raised if a complete conversion to the International Convention measurement system * * * is made." Until such time as the report is submitted to Congress, and any changes to U.S. laws resulting from that study are enacted, the Coast Guard cannot address the issue of future application of the present tonnage measurement system.

As stated in the preamble to the Interim Final Rule, the Coast Guard will make every attempt to allow merchant mariners to continue service on those vessels on which they are presently

employed. The exact mechanism which will be used to accomplish this cannot be determined until regulations are developed pursuant to legislation implementing the International Convention on Tonnage Measurement of Ships, 1969.

22. *Definitions:* One comment objected to the exclusion of deck maintenance persons from the definition of "deck crew." The Coast Guard has consistently held that individuals signed on as maintenance persons and carried in excess of the complement required by a vessel's Certificate of Inspection do not come within the purview of the term "deck crew." No compelling reason has been presented to change this position.

To avoid confusion in interpreting and applying certain sections of Part 15, an explanation of the terms "self-propelled," "propelled by machinery," and "mechanically propelled" has been added to § 15.301 of the Final Rule. Although these terms, which are synonymous for purposes of Part 15, generally conform with the language of the underlying statutes, it is believed that confusion would result if the explanation was not included in the Final Rule. It should be noted that these terms also include vessels fitted with both sails and mechanical propulsion.

A related issue concerns the applicability of § 15.701, Officers' Competency Certificates Convention, 1936, to sail vessels. Although portions of §§ 15.805 and 15.810 reiterate the requirements of the Officers' Competency Certificates Convention, 1936, these sections should not be construed as limiting § 15.701 to self-propelled vessels only. Section 15.701 applies to self-propelled vessels and to sail vessels, unless otherwise excepted by § 15.701(a).

23. *Employment within restrictions of license or document:* One comment noted that § 15.401 would require all individuals serving on vessels subject to any requirement of Part 15 to hold a valid license, certificate of registry, or merchant mariner's document. This was not the intent of the section. Therefore, it has been revised to make it clear that the requirements of this section apply only to positions in which an individual is required by law or regulation to hold such a license, certificate of registry, or merchant mariner's document.

24. *Familiarity with vessel characteristics:* While agreeing with the intent of the requirement for individuals to become familiar with the characteristics of the vessels on which they are engaged, one comment expressed concern with the possible interpretations of this requirement; for example, an able seaman being required to be familiar with the technical aspects of a vessel's machinery space automation systems. The Interim Final Rule required individuals to become familiar with the relevant characteristics of the vessel. Inclusion of the word "relevant" qualifies this requirement to the characteristics of the vessel which are related to duties the individual will perform or be expected to perform. Therefore, this provision has not been changed in the Final Rule.

25. *Certificate of Inspection manning levels:* One comment objected to individual OCMIs determining minimum required crew complements due to the possibility that disparate complements may be required aboard similar vessels of a class. Disparities are often due to reasons such as the owner not pursuing reduced engineroom manning based on automation, nonfunctioning systems or equipment on some vessels in a class, differing operating routes or procedures, etc. The OCMI is the Coast Guard official most familiar with the particulars of each vessel he or she certificates; for this reason, the OCMIs' authority to determine specific manning levels for inspected vessels has been retained. Another comment suggested additions to the list of factors to be considered by the OCMI when determining minimum complements for inspected vessels. Although the factors listed in § 15.501(b) were not intended to be all-inclusive, the suggested additions are worthy of inclusion and the section has been revised accordingly.

26. *Voyage:* One comment suggested defining "voyage" as the period of time necessary to transit from the last port of departure to the next port of arrival. The suggested definition is contrary to the Coast Guard's longstanding interpretation that stops at intermediate ports while enroute to the final port do not break the continuity of the "voyage." For this reason, the suggested change has not been adopted.

27. *Watches:* One comment took exception to the statement in § 15.705 that the establishment of adequate watches is the responsibility of the vessel's master. Circumstances dictate the types of watches required for safe operation of a vessel. Those circumstances include the materiel condition of the vessel, type of propulsion, weather, navigational hazards, number of other vessels in the area, etc. Since many of these factors are variables that change literally from minute to minute, only an individual physically present and "in charge" of the vessel has all the necessary information to make a decision on the proper deployment of shipboard personnel. Therefore, the master is responsible for making these determinations, and the statement has been retained. Another comment construed § 15.705 of the Interim Final Rule as requiring vessels' chief engineers to stand watches. That section does not specify this. In most situations, adequate licensed engineers are carried or circumstances are such that the chief engineer is not required to stand watches. For this reason, the wording of § 15.705 in the final rule has not been changed.

28. *Watches on uninspected towing vessels:* One comment objected to the Coast Guard's interpretation that permits licensed individuals serving as operators of uninspected towing vessels that are not subject to the provisions of the Officers' Competency Certificates Convention, 1936, to be divided into two watches regardless of the length of the voyage. The Coast Guard evaluated the issue and concluded that Congress contemplated the two watch system for these vessels. For this reason, no change is being made to the final rule. Another comment advocates extension of the two watch system to masters and mates of seagoing uninspected towing vessels that are subject to the provisions of the Officers' Competency Certificates Convention, 1936. The Coast Guard has consistently maintained that the three watch system of 46 U.S.C. 8104(d) applies to these individuals except when the vessel is engaged on a voyage of less than 600 miles. The final rule reflects this.

29. *Working hours:* One comment urged inclusion of a prohibition against unnecessary work on Sundays and certain holidays when a vessel is at sea. Section 15.710 is a reiteration of portions of 46 U.S.C. 8104 which address this prohibition to vessels in safe harbors. Inasmuch as the statute does not include vessels at sea in this prohibition, the suggestion has not been adopted in the Final Rule.

30. *Sailing short:* One comment suggested that the sailing short requirement include provisions for situations in which a seaman is authorized vacation and a replacement cannot be obtained. This situation does not fall within the statutory requirements of 46 U.S.C. 8101(e). Thus, the sailing short requirement, a reiteration of the statute, has not been revised to authorize departure of the vessel on its voyage in this situation.

31. *Responsibility for proper manning:* One comment noted that not all vessels are commanded by individuals licensed as master, yet the proper manning of vessels in accordance with the applicable laws, regulations, and

international conventions is the responsibility of the individual in command of the vessel. The Coast Guard concurs and § 15.801 has been revised accordingly.

32. *Master:* Inasmuch as 46 U.S.C. 2101 contains definitions of both "passenger vessel" and "small passenger vessel," § 15.805 has been revised in the Final Rule to clarify the Coast Guard's intent of requiring a master on every passenger and small passenger vessel.

33. *Minimum number of mates:* One comment suggested specifying, in regulation, the minimum number of mates required on inspected, inland vessels. The OCMI who certificates the vessel is the Coast Guard official most familiar with the vessel and its operations, and is, therefore, in the best position to determine the minimum number of mates required for safe vessel operations. Although, § 15.801 requires OCMIs to determine specific manning levels (including mates, first class pilots, etc.), § 15.810 has been revised to clarify the OCMIs' authority for determining the minimum number of mates to be required on inspected vessels, including inland vessels. Another comment concerned the application of the requirement for a mate on vessels of less than 100 gross tons which do not make "voyages" in the traditional sense of the term. The comment was directed to vessels making short transits between two locations, such as a vessel engaged in ferry operations. No change has been made to the Final Rule because in these situations an OCMI can endorse the vessel's Certificate of Inspection to require that alternate crews be provided. This obviates the need for continuously carrying a licensed mate as a second watchstander for operations exceeding 12 hours in any 24 hour period.

34. *Radar observer:* One comment recommended that all commercial vessels, and vessels which carry more than six passengers, be required to be fitted with radar, and that the licensed deck individuals on these vessels be required to possess radar observer qualifications. Vessel equipment requirements are outside the scope of this rulemaking. A regulatory project currently under development (CGD 85–080a) will address the issue of radar observer qualifications for licensed deck individuals on small passenger vessels.

35. *Lookouts:* Three comments recommended modification or deletion of the requirement of § 15.850 that the duties of lookout be performed by a member of the navigational watch. The comments suggested that the requirement could be construed as not allowing other vessel crewmembers to stand a lookout watch in the event that a regular watchstander is not available due to illness or some other reason. The requirement has been retained. The rule does not preclude other qualified individuals from being assigned lookout duties. During such periods, these individuals become part of the navigational watch and are subject to requirements such as the three watch requirements of § 15.705.

36. *Equivalents:* Additional revisions have been made to the Final Rule to clarify certain sections of Subpart H of Part 15, Equivalents. These revisions are the result of comments received and requests for clarification from Coast Guard district and field offices. The revisions are:

(a) The structure of the text of § 15.901 has been revised for consistency with the other sections in Subpart H. Other revisions to § 15.901 are noted below.

(b) Sections 15.901, 15.905, and 15.910 have been revised to clarify the intent that certain of the authorities allowed by these sections apply only to individuals who hold licenses for service on inspected, self-propelled vessels. Without these revisions, these sections could be construed as authorizing individuals licensed for service on uninspected vessels such as fishing industry vessels to serve in licensed capacities on certain inspected vessels, certain passenger carrying vessels, and uninspected towing vessels. This was not the intent of these sections, therefore, the revisions clarify the types of licenses necessary for these authorizations.

(c) Individuals holding licenses as first class pilot are authorized by §§ 15.901, 15.905, and 15.910 of the final rule to serve as master on vessels of not more than 100 gross tons, operator of uninspected passenger vessels, and operator of uninspected towing vessels, respectively, within any restrictions on the individual's license. Section 15.901(a) of the Interim Final Rule authorized pilots to serve as master on vessels of not more than 100 gross tons, therefore, authorization to also serve as operator of uninspected passenger vessels is also considered appropriate. One comment recommended continuance of the authority for pilots to serve as operators of uninspected towing vessels. This authorization is consistent with past Coast Guard policy and with the stated intention of this project to minimize penalties to current license holders whenever possible. It should be noted, however, that service beyond the restrictions on an individual's license, including geographic or route restrictions, is not authorized. It should also be noted that a license as first class pilot does not, by itself, authorize service on uninspected towing vessels which are subject to the Officers' Competency Certificates Convention, 1936. Similarly, licenses as operator or second-class operator of uninspected towing vessels or other licenses which authorize such service do not, by themselves, authorize service on uninspected towing vessels which are subject to the convention.

(d) In addition to other revisions described in this document, § 15.905 of the Final Rule incorporates two additional changes. The first relates to the authority of mates to serve as operators of uninspected passenger vessels. Part 10 of the final rule requires six months service for an individual to qualify for a license as mate of Great Lakes, inland or river vessels of not more than 200 gross tons. To qualify for a license as operator of uninspected passenger vessels, an individual is required to have 12 months service. Two comments objected to the authorization for these mates, with their reduced service requirements, to serve as operator on Great Lakes or inland vessels. The Coast Guard concurs and has, therefore, eliminated the authorization for mates of Great Lakes or inland vessels of not more than 200 gross tons to serve as operators of uninspected passenger vessels. The other change relates to gross tonnage limitations on the licenses of individuals authorized by this section to serve as operator of uninspected passenger vessels, i.e. uninspected vessels of less than 100 gross tons carrying not more than six passengers. Operator of uninspected passenger vessel licenses are not issued with tonnage limitations, therefore, individuals authorized service on these vessels by § 15.905 should not be limited by the gross tonnage limitations of their licenses. Section § 15.905 has been revised accordingly. It should be noted that the operator requirements apply to self-propelled uninspected passenger vessels, therefore, a license authorizing service on self-propelled vessels satisfies the section even though the uninspected passenger vessel might also be equipped with sails.

(e) Section 15.910(b) has been amended to clarify its intent that an operator of uninspected towing vessels be on board when the vessel is being operated by an individual whose license authorizes service as second-class operator only (as opposed to a license which authorizes service as both operator and second-class operator of uninspected towing vessels).

(f) Section 15.915 has been revised to provide consistency with the revision to § 10.501 made by this Final Rule and to incorporate the specific service authorities allowed for designated duty engineers.

37. *Tug and barge limitation on pilot's licenses:* One commenter disagreed with the tug and barge combination limitation on a first class pilot's license or endorsement which is permitted under § 10.711(d). The commenter stated that the pilot license should not be trade/vessel restrictive since a pilot who gains the experience and passes the examination, including the chart sketch, has proven his/her professional competence. The Officer in Charge, Marine Inspection (OCMI) has always had the authority to impose appropriate limitations commensurate with the experience of the applicant, with respect to class or type of vessel, tonnage, route, and waters (46 CFR 10.701(c)). Therefore, § 10.711(d) does not give the OCMI any new or additional authority; he already has it. The discussion in the regulation itself (§ 10.711(d)) regarding a tug and barge combination limitation is intended as clarification and guidance. We agree with the commenter to a certain extent, in that, in the majority of cases we would not expect the limitation to be imposed. However, there are circumstances that, due to the nature of the waters and the overall experience of the applicant, self-propelled vessel experience would be necessary to obtain a first class pilot's license or endorsement that is not restricted to tug and barge combinations.

38. *Authority to "serve as" pilot on tank barges:* One commenter stated that in the § 15.812(e) provision permitting an operator to "serve as" pilot for tank barges, the Coast Guard leaves it up to the operator to determine the geographic limits of the route. This problem stems from the fact that the "serve as" pilot is not issued a pilot license or endorsement that describes the specific waters, including geographic limitations, upon which he is authorized to serve as pilot. The individual master, mate, or operator must self-certify that he or she has become qualified by acquiring the required round trips over the route upon which he or she intends to serve as pilot. Without receiving an endorsement, the individual does not have any documentation to indicate that the Coast Guard concurs in his or her interpretation of the geographic area upon which he or she is qualified to serve. The Coast Guard is in the process of developing a Navigation and Vessel Inspection Circular (NVIC), or other suitable document, which would identify the geographic limits of routes for the "serve as" pilot. Additionally, the commenter stated that the Coast Guard does not make an effort to verify that the required number of round trips has been made. As to verification of the round trips, the Coast Guard intends that this requirement would be self-enforcing due to the consequences of serving as a pilot without a valid license, endorsement or authorization. The same commenter asked how the "serve as" pilot can demonstrate his local knowledge and familiarity with the route if he or she does not have to do a chart sketch. In the case of the "serve as" pilot, the required round trips provide the local knowledge. The commenter also asked why we would permit individuals to "serve as" pilot when they have the opportunity to be licensed pilots. The Coast Guard does not approach licensing requirements based on "the opportunity to be licensed," but rather, on reasonable safety standards and requirements. In the case of the "serve as" pilot, our analysis indicates that safety would not be sacrificed by permitting individuals to serve as pilot, without taking the first class pilot examination, provided they satisfy the other requirements identified in the regulations.

39. *Recency for pilotage:* One commenter stated that recency of service over the specified waters should be required for an individual to serve as a pilot. Section 15.812(d) states that a licensed master or mate qualifying under § 15.812(c)(2) may serve as pilot. In order to qualify under that section, an individual must comply with the recency of knowledge provisions of 46 CFR 10.713 (see § 15.812(c)(2)(ii)). Therefore, recency of service is required before an individual may serve as pilot under the authority of his master or mate's license. One round trip over the route within the past 60 months is required.

40. *Authority to require pilots on Great Lakes vessels:* One comment stated that there is no legal authority to issue a blanket requirement for pilots onboard Great Lakes vessels operating under enrollment.

The Coast Guard originally required a pilot on vessels operating on the Great Lakes under the authority of the old 46 U.S.C. 404 which was amended by Pub. L. 96-378 to replace the word "pilot" with "deck officer." The Coast Guard is authorized under 46 U.S.C. 8101 to determine the complement of licensed individuals, including pilots, considered necessary for a vessel's safe operation. The Coast Guard continues to require pilots on inspected mechanically propelled vessels and tank barges inspected under 46 U.S.C. Chapter 37 operating on the Great Lakes under this authority.

41. *Signaling (flashing light) proficiency:* Aside from the preamble discussion of the signaling requirement for licenses, the only mention of this requirement in the Interim Final Rule is its inclusion in the table of subjects for deck licenses, § 10.910. A strict interpretation of this table would preclude an individual who has successfully completed all the examination requirements, except the signaling requirement, from obtaining a license as third mate, second mate, chief mate, or master. This is an unintended reversal of a longstanding Coast Guard policy to issue the license where flashing light proficiency is deficient, but to limit the tonnage on which service is authorized. The Coast Guard will continue this policy. Therefore, § 10.401 of the final rule has been revised to permit the issuance of a license limited to vessels of not more than 1600 gross tons to those applicants who successfully complete all parts of the examination, except the signaling requirement.

42. *Service Requirements for Endorsement as First Class Pilot:* As indicated in the Interim Final Rule (52 FR 38658), the Coast Guard intended to incorporate the substance of its final rule (50 FR 26106) concerning the professional requirements for pilot licenses by reformatting and reorganizing it to be consistent with the rules for licensing of maritime personnel, published simultaneously (52 FR 38614). Comments from Coast Guard licensing officials pointed out the unintended elimination in the Interim Final Rule of specific service requirements for an endorsement as first class pilot on an individual's license. Section 10.703 has been revised in the final rule to restore these long standing specific service requirements. In addition, § 10.701 is revised in the final rule to make it clear that endorsements as first class pilot for service on vessels of 1600 gross tons or less will not be issued. Such endorsements are unnecessary, as § 15.812 authorizes appropriately licensed individuals to serve as pilots on vessels of not more than 1600 gross tons.

43. *Route Familiarization Requirements:* An individual questioned whether experience as an observer would satisfy the round trip requirements for route familiarization contained in § 10.705(b). Observer experience has been acceptable since 1965, and probably before that. The pre-

June 1985 pilot regulations included the sentence "Experience as an observer, properly certified by the master and/or pilot of the vessel is also acceptable in such cases". That sentence was replaced in the present regulations with the phrase "or in an equivalent capacity". We considered the "equivalent capacity" phrase to be broader and to include the observer, as it was not our intent to eliminate observer experience. Therefore, we are adding the sentence "Evidence of having completed a minimum number of round trips while servicing as an observer, properly certified by the master and/or pilot of the vessel, is also acceptable" to the regulations in order to make it clearer that observer experience is acceptable.

Regulatory Evaluation

The regulatory evaluations published with the Interim Final Rules on October 16, 1987 (52 FR 38614 and 52 FR 38658) are still valid. The revisions included in this final rule do not alter the assumptions or cost estimates previously published.

The agency certifies that these final rules will not have a significant economic impact on a substantial number of small entities. These final rules apply to licenses for individuals only. The residual effects on training schools may be a minor modification in some course structures to reflect exam topics for licenses, course title changes to reflect new license titles, and, possibly, some combining of courses to account for the deletion of most trade restricted licenses.

This action has been analyzed in accordance with the principles and criteria contained in Executive Order 12612, and it has been determined that the final rules do not have sufficient federalism implications to warrant the preparation of a Federalism Assessment.

These final rules contain no new information collection requirements. The information collection requirements that they do contain have been submitted to the Office of Management and Budget (OMB) for review under the Paperwork Reduction Act (44 U.S.C. 3501 *et seq.*) and have been approved by OMB. The section numbers and the corresponding OMB approval numbers are listed in § 10.107.

A regulatory information number (RIN) is assigned to each regulatory action listed in the Unified Agenda of Federal Regulations. The Regulatory Information Service Center publishes the Unified Agenda in April and October of each year. The RIN number contained in the heading of this document can be used to cross reference this action with the Unified Agenda.

List of Subjects

33 CFR Part 155

Oil pollution, Vessels.

46 CFR Parts 10 and 12

Seamen, Marine safety, Navigation (water), Passenger vessels.

46 CFR Part 15

Seamen, Vessels.

46 CFR Part 30

Administrative practice and procedure, Barges, Foreign relations, Hazardous materials transportation, Penalties, Tank vessels.

46 CFR Part 31

Barges, Flammable materials, Law enforcement, Marine safety, Tank vessels.

46 CFR Part 35

Barges, Marine safety, Navigation (water), Reporting requirements, Tank vessels.

46 CFR Part 151

Barges, Flammable materials, Hazardous materials transportation, Marine safety, Tank vessels.

46 CFR Part 185

Marine safety, Navigation (water), Passenger vessels, Reporting and recordkeeping requirements.

Accordingly, the interim rules amending 46 CFR Parts 1, 10, 15, 26, 35, 157, 175, 185, 186, and 187 which were published at 52 FR 38614 and 38658 on October 16, 1987, are adopted as final rules with the following changes. In addition, 46 CFR Parts 12, 30, 31, and 151 and 33 CFR Part 155 are amended as set forth below.

SUBCHAPTER B—MERCHANT MARINE OFFICERS AND SEAMEN

PART 10—LICENSING OF MARITIME PERSONNEL

1. The authority citation for Part 10 is revised to read as follows:

Authority: 46 U.S.C. 2103, 7101, 7701, 8105; 49 CFR 1.45, 1.46; § 10.107 also issued under the authority of 44 U.S.C. 3507.

2. The table of contents for Part 10 is amended by revising the section headings for §§ 10.201, 10.202, 10.219, 10.410 and 10.420, adding § 10.421, redesignating § 10.428 as 10.427 and § 10.429 as 10.428, adding a new § 10.429, removing § 10.440, adding §§ 10.446 and 10.448, redesignating § 10.455 as 10.456 and § 10.456 as 10.457, adding new §§ 10.455 and 10.459, removing § 10.460, redesignating § 10.504 as 10.505, adding new § 10.504, and removing § 10.905. The added and revised headings read as follows:

SUBCHAPTER B—MERCHANT MARINE OFFICERS AND SEAMEN

PART 10—LICENSING OF MARITIME PERSONNEL

Sec.

* * * * *

Subpart B—General Requirements for all Licenses and Certificates of Registry

10.201 Eligibility for licenses and certificates of registry, general.

10.202 Issuance of licenses and certificates of registry.

* * * * *

10.219 Issuance of duplicate license or certificate of registry.

* * * * *

Subpart D—Professional Requirements for Deck Officers' Licenses

* * * * *

10.410 Requirements for deck licenses for vessels of not more than 1600 gross tons.

* * * * *

10.420 Service requirements for mate of ocean steam or motor vessels of not more than 500 gross tons.

10.421 Service requirements for mate of near coastal steam or motor vessels of not more than 500 gross tons.

* * * * *

10.429 Service requirements for limited master of near coastal steam or motor vessels of not more than 100 gross tons.

* * * * *

10.446 Service requirements for master of Great Lakes and inland steam or motor vessels of not more than 500 gross tons.

10.448 Service requirements for mate of Great Lakes and inland steam or motor vessels of not more than 500 gross tons.

* * * * *

10.455 Service requirements for master of Great Lakes and inland steam or motor vessels of not more than 100 gross tons.

* * * * *

10.459 Service requirements for master or mate of rivers.

* * * * *

10.504 Application of deck service for limited engineer licenses.

* * * * *

3. Section 10.103 is amended by revising the definitions of "*Inland waters*" and "*Oceans*", and by adding the definition of "*Rivers*" in alphabetical order:

§ 10.103 Definitions of terms used in this part.

* * * * *

"*Inland Waters*" means the navigable waters of the United States shoreward

of the Boundary Lines as described in 46 CFR Part 7, excluding the Great Lakes. For the purposes of establishing sea service credit, the waters of the Inside Passage between Puget Sound and Cape Spencer, Alaska, are considered as inland.

* * * * *

"*Oceans*" means the waters seaward of the Boundary Lines as described in 46 CFR Part 7. For the purposes of establishing sea service credit, the waters of the Inside Passage between Puget Sound and Cape Spencer, Alaska, are not considered oceans.

* * * * *

"*Rivers*" means any river, canal, or other similar body of water designated by the Officer in Charge, Marine Inspection.

* * * * *

4. Section 10.107 is amended by revising paragraphs (b) (1) and (2) and removing (b)(3) through (b)(5) to read as follows:

§ 10.107 Paperwork approval.

* * * * *

(b) * * *

(1) OMB 2115–0514—46 CFR 10.201, 10.202, 10.205, 10.207, 10.209.

(2) OMB 2115–0111—46 CFR 10.302, 10.303, 10.304, 10.480.

5. Section 10.201 is amended by revising the section heading and paragraphs (a), (b), (c), (f)(1) and (f)(2) to read as follows:

§ 10.201 Eligibility for licenses and certificates of registry, general.

(a) The applicant must establish to the satisfaction of the Officer in Charge, Marine Inspection, that he or she possesses all of the qualifications necessary, e.g., age, experience, character references and recommendations, physical examination, citizenship, and training, and pass a professional examination, as appropriate, before a license or certificate of registry is issued.

(b) No person is eligible for a license or certificate of registry who has been convicted by a court of record of a violation of the dangerous drug laws of the United States, the District of Columbia, or any state or territory of the United States, within three years prior to the date of filing the application (this period may be extended up to ten years after conviction, if the gravity of the facts or circumstances of the case warrant) or who, unless he or she furnishes satisfactory evidence of cure, has ever been the user of or addicted to the use of a dangerous drug.

(c) Except as provided in § 10.464(i) of the part, an applicant for a license must demonstrate an ability to speak and understand English as found in the navigation rules, aids to navigation publications, emergency equipment instructions, machinery instructions, and radiotelephone communications instructions.

* * * * *

(f) * * *

(1) A license as master of near coastal, Great Lakes and inland, inland, or river vessels of 25–200 gross tons, third mate, third assistant engineer, mate of vessels of 200–1600 gross tons, assistant engineer of fishing industry vessels, second-class operator of uninspected towing vessels, radio officer, assistant engineer (limited-oceans), or designated duty engineer of vessels of not more than 4000 horsepower, may be granted to an applicant who has reached the age of 19 years.

(2) A license as limited master of near coastal vessels of not more than 100 gross tons, limited master of Great Lakes and inland vessels of not more than 100 gross tons, mate of Great Lakes and inland vessels of 25–200 gross tons, mate of near coastal vessels of 25–200 gross tons, operator of uninspected passenger vessels, or designated duty engineer of vessels of not more than 1000 horsepower, may be granted to an applicant who has reached the age of 18 years.

* * * * *

6. Section 10.202 is amended by revising the section heading and paragraphs (b), (d), (g), and (h) to read as follows:

§ 10.202 Issuance of licenses and certificates of registry.

* * * * *

(b) Any person who is found qualified under the requirements set forth in this Part is issued an appropriate license valid for a term of five years from date of issue. A certificate of registry does not expire.

* * * * *

(d) Every person who receives an original license or certificate of registry shall take an oath before a designated Coast Guard official that he or she will faithfully and honestly, according to his or her best skill and judgment, without concealment or reservation, perform all the duties required by law and obey all lawful orders of superior officers. Such an oath remains binding for all subsequent licenses or certificates of registry issued to that person unless specifically renounced in writing.

* * * * *

(g) If an Officer in Charge, Marine Inspection, refuses to grant an applicant the license or certificate of registry for which applied, the OCMI will furnish the applicant, if requested, a written statement setting forth the cause of denial.

(h) The Officer in Charge, Marine Inspection, may modify the service and examination requirements in this Part to satisfy the unique qualification requirements of an applicant. The Officer in Charge, Marine Inspection, may also lower the age requirement for operator of uninspected passenger vessels license applicants. The authority granted by a license will be restricted on its face to reflect any modifications made under the authority of this paragraph. Such restrictions shall not be removed without the approval of the OCMI issuing the license.

§ 10.203 [Amended]

7. The table in § 10.203, is amended by removing "N/A" in the third column (citizenship requirement), and, in its place, inserting "Yes".

8. Section 10.205 is amended by revising paragraphs (c)(1)(ii), (d)(2) introductory text, (d)(4), (f)(1), and (f)(2), by adding paragraph (f)(4), by revising the introductory text of paragraph (h), and paragraphs (h)(1)(iii), (h)(2)(ii), and (h)(2)(iii), by adding paragraph (h)(2)(iv), and by revising paragraph (i)(1) to read as follows:

§ 10.205 Requirements for original licenses and certificates of registry.

* * * * *

(c) * * *

(1) * * *

(ii) Certificate of naturalization (original must be presented; photocopies are unlawful).

* * * * *

(d) * * *

(2) For an original license as master, mate, pilot, or operator, the applicant must have vision correctable to at least 20/40 in each eye and uncorrected vision of at least 20/200 in each eye. The color sense must be determined to be satisfactory when tested by any of the following methods, without the use of color sensing lenses:

* * * * *

(4) Where an applicant does not possess the vision, hearing, or general physical condition necessary, the OCMI, after consultation with the examining physician or physician's assistant, may recommend a waiver to the Commandant if extenuating circumstances warrant special consideration. Applicants may submit to the OCMI, additional correspondence, records and reports in support of this request. In this regard, recommendations from agencies of the Federal Government operating government

vessels, as well as owners and operators of private vessels, made in behalf of their employees, will be given full consideration. Waivers are not normally granted to an applicant whose corrected vision in the better eye is not at least 20/40 for deck licenses or 20/50 for engineer licenses.

* * * * *

(f) *Character check and references.* (1) Each applicant for an original license shall submit written recommendations concerning the applicant's suitability for duty from a master and two other licensed officers of vessels on which the applicant has served. For a license as engineer or as pilot, at least one of the recommendations must be from the chief engineer or licensed pilot, respectively, of a vessel on which the applicant has served. For a license as engineer where service was obtained on vessels not carrying a licensed engineer and for a license as operator of uninspected towing vessels, the recommendations may be from recent marine employers with at least one recommendation from a master, operator, or person in charge of a vessel upon which the applicant has served. Where an applicant qualifies for a license through an approved training school, one of the character references must be an official of that school. For a license for which no commercial experience may be required, such as: Master or mate 25–200 gross tons, operator of uninspected passenger vessels, radio officer or certificate of registry, the applicant may have the written recommendations of three persons who have knowledge of the applicant's suitability for duty.

(2) Each applicant's fingerprints are taken during the application process. The fingerprints are checked against the records of law enforcement and other government agencies. The application of any person may be rejected when information has been brought to the attention of the OCMI which indicates that the applicant's habits of life and character are such as to warrant the belief that the applicant cannot be entrusted with the duties and responsibilities of the license or certificate of registry for which application is made. In the event an application is rejected, the applicant is notified in writing of the reason(s) for rejection and advised that the appeal procedures in § 10.204 of this part apply. No examination is given pending decision on appeal.

* * * * *

(4) In the event a license or certificate of registry has already been issued when information about the applicant's habits of life and character is brought to the attention of the OCMI, if such information warrants the belief that the applicant cannot be entrusted with the duties and responsibilities of the license or certificate of registry issued, or if such information indicates that the application for the license or certificate of registry was false or incomplete, the OCMI may notify the holder in writing that the license or certificate of registry is considered null and void, direct the holder to return it to the OCMI, and advise the holder that, upon return of the license or certificate of registry, the appeal procedures of § 10.204 of this part apply.

* * * * *

(h) *First aid and cardiopulmonary resuscitation (CPR) course certificates.* All applicants for an original license or certificate of registry, except as provided in §§ 10.429, 10.456, and 10.466 of this part, must present to the OCMI:

(1) * * *

(iii) A course the OCMI determines meets or exceeds the standards of the American Red Cross courses; and,

(2) * * *

(ii) The American Heart Association;

(iii) A Coast Guard approved CPR training course; or,

(iv) A course the OCMI determines meets or exceeds the standards of the American Red Cross or American Heart Association courses.

(i) *Professional examination.* (1) When an applicant's experience and training are found to be satisfactory and the applicant is eligible in all other respects, the OCMI examines the applicant, in writing; except that, if the license is to be limited to uninspected fishing industry vessels, the applicant may request an oral-assisted examination. The alternative of an oral-assisted examination is also available to applicants for deck or engineer licenses limited to 500 gross tons. If there is demonstrated difficulty in reading and understanding the questions, the oral-assisted examination shall be offered. Any license based on oral-assisted examination is limited to the specific route and type of vessel upon which the majority of experience was obtained. The instructions for administration of examinations and the lists of subjects for all licenses are contained in Subpart I of this Part. A record indicating the subjects covered is placed in the applicant's license file.

* * * * *

9. Section 10.207 is amended by revising the last sentence of paragraph (c)(5) to read as follows:

§ 10.207 Requirements for raise of grade of license.

* * * * *

(c) * * *

(5) * * * An applicant who has obtained the qualifying experience on foreign vessels shall submit satisfactory documentary evidence of such service (including any necessary translations into English) in the forms prescribed by paragraph (c)(2) of this section.

* * * * *

10. Section 10.209 is amended by revising the first sentence of paragraph (a), by removing paragraph (c)(2) and redesignating paragraphs (c)(3) through (c)(5) as paragraphs (c)(2) through (c)(4), respectively, by revising the new paragraph (c)(4), by revising paragraphs (e)(3)(i)(B), (e)(3)(i)(C), and (f), and by adding paragraph (g) to read as follows:

§ 10.209 Requirements for renewal of license.

(a) *General.* Except as provided in paragraph (g) of this section, applicants for renewal of licenses shall establish that they possess all of the qualifications necessary before they are issued a renewal of license. * * *

* * * * *

(c)(4) An applicant for renewal of a radio officer's license shall, in addition to meeting the requirements of paragraphs (a) and (b) of this section, present a currently valid license as first- or second-class radiotelegraph operator issued by the Federal Communications Commission. This license is returned to the applicant.

* * * * *

(e) * * *

(3) * * *

(i) * * *

(B) The license to be renewed, or a photocopy of the license, including the back and all attachments, if it is unexpired;

(C) A certification from a licensed physician or physician's assistant in accordance with paragraph (d) of this section;

* * * * *

(f) *Reissue of expired license.* Whenever an applicant applies for reissuance of a license more than 12 months after expiration, the applicant must complete an approved course or pass the complete examination for that license to demonstrate continued professional knowledge. The examination may be oral-assisted if the license being renewed was awarded on such an oral exam. In the case of an expired radio officer's license, the license may be reissued upon presentation of a valid first- or second-

class radiotelegraph operator license issued by the Federal Communications Commission.

(g) *Inactive license renewal.* (1) Applicants for renewal of licenses who are unwilling or otherwise unable to meet the requirements of paragraphs (c) or (d) of this section may renew their licenses, with the following restrictive endorsement placed on the back of the license: "License renewed for continuity purposes only; service under the authority of this license is prohibited." Holders of licenses with this "continuity endorsement" may have the prohibition rescinded at any time by satisfying the renewal requirements in paragraphs (c) and (d) of this section.

(2) Applications for renewal of a license with the continuity endorsement must include:

(i) The license to be renewed, or a photocopy of the license, including the back and all attachments, if it is unexpired; and,

(ii) A signed statement from the applicant attesting to an awareness of the restrictions to be placed on the renewed license, and of the requirements for rescinding the continuity endorsement.

11. Section 10.211 is amended by revising paragraph (c) to read as follows:

§ 10.211 Creditable service and equivalents for licensing purposes.

* * * * *

(c) Service on mobile offshore drilling units is creditable for raise of grade of license. Evidence of one year's service as mate or equivalent while holding a license as third mate, or as engineering officer of the watch or equivalent while holding a license as third assistant engineer, is acceptable for a raise of grade to second mate or second assistant engineer, respectively; however, any subsequent raises of grade of unlimited, nonrestricted licenses must include a minimum of six months of service on conventional vessels.

* * * * *

12. Section 10.217 is amended by revising paragraph (a)(1) to read as follows:

§ 10.217 Examination procedures and denial of licenses.

(a)(1) The examinations for all deck and engineer unlimited licenses are administered at periodic intervals. If the applicant fails three or more sections of the examination, a complete reexamination must be taken, but may be taken during any of the scheduled exam periods. On the subsequent exam, if the applicant again fails three or more sections, at least three months must lapse before another complete examination is attempted. If an applicant fails one or two sections of an examination, he or she may be retested twice on these sections during the next three months. If the applicant does not successfully complete these sections within the three month period, a complete reexamination must be taken, after a lapse of at least three months from the date of the last retest. The three month retest period may be extended by the OCMI if the examinee presents discharges documenting sea time which prevented the taking of a retest during the three month period. The retest period may not be extended beyond seven months from the initial examination.

* * * * *

13. Section 10.219 is revised to read as follows:

§ 10.219 Issuance of duplicate license or certificate of registry.

Whenever a person to whom a license or certificate of registry has been issued loses the license or certificate, that person shall report the loss to any OCMI. A duplicate license or certificate may be issued by an OCMI listed in the note following § 1.05(b) of this Part after receiving an application with an affidavit describing the circumstances of the loss from the applicant and verification of the license or certificate record from the Regional Examination Center where it was issued or from the Commandant. The duplicate will be prepared in the same format and wording as the license or certificate being replaced. A duplicate license is issued for the unexpired term of the lost license. Duplicate licenses and certificates of registry bear the following statement: "This license (or certificate) replaces License (or Certificate) Number ____ issued at ____ on the above date."

14. Section 10.304 is amended by revising paragraph (a) to read as follows:

§ 10.304 Substitution of training for required service.

(a) Satisfactory completion of certain training courses approved by the Commandant may be substituted for a portion of the required service for many deck and engineer licenses and for qualified ratings of unlicensed personnel. The list of all currently approved courses of instruction including the equivalent service and applicable licenses and ratings is maintained by Commandant (G–MVP). Satisfactory completion of an approved training course may be substituted for not more than two-thirds of the required service on deck or in the engine department for deck or engineer licenses, respectively, and for qualified ratings.

* * * * *

15. Section 10.401 is amended by revising paragraph (d) and the introductory text of paragraph (g), and by adding a new paragraph (h) to read as follows:

§ 10.401 Ocean and near coastal licenses.

* * * * *

(d) A licensee having a master or mate near coastal license obtained with ocean service may have the license endorsed for ocean service by completing the appropriate examination deficiencies, provided that the additional service requirements of paragraph (e) of this section do not apply.

* * * * *

(g) In order to obtain a master or mate license with a tonnage limit above 200 gross tons, or a license for 200 gross tons or less with an ocean route, whether an original, raise in grade, or increase in the scope of license authority to a higher tonnage category, the applicant must successfully complete the following training and examination requirements:

* * * * *

(h) Each applicant for a deck license which authorizes service on vessels above 1600 gross tons on ocean or near coastal waters, whether original or raise of grade, must pass a practical signaling examination (flashing light). A license applicant who fails in practical signaling, but passes every other part of the examination, may be issued a license with a 1600 gross ton limitation. The tonnage limitation can be removed upon successful completion of the signaling examination.

16. Section 10.402 is amended by revising paragraphs (a), (b), and (c)(3), and by adding paragraph (d) to read as follows:

§ 10.402 Tonnage requirements for ocean or near coastal licenses for vessels of over 1600 gross tons.

(a) To qualify for an ocean or near coastal license for vessels of any gross tons, all the required experience must be obtained on vessels of over 200 gross tons. At least one-half of the required experience must be obtained on vessels of over 1600 gross tons.

(b) If the applicant for an original or raise of grade of a license as master or mate does not have the service on vessels over 1600 gross tons required by paragraph (a) of this section, or is qualifying for third mate under the provisions of paragraph § 10.407(c) of this subpart, a tonnage limitation is

placed on the license based on the applicant's qualifying experience. * * *

(c) * * *

(3) When the applicant has 12 months of service as able seaman on vessels over 1600 gross tons while holding a license as third mate, all tonnage limitations on the third mate's license are removed.

(d) Individuals holding licenses as master or mate of vessels of not more than 1600 gross tons, not more than 500 gross tons, or not more than 25–200 gross tons are prohibited from using the provisions of paragraph (c) of this section to increase the tonnages of their licenses.

17. Section 10.403 is amended by removing Figures 10.403–1 and 10.403–2 and replacing them with Figure 10.403 as follows:

BILLING CODE 4910-14-M

FIGURE 10.403 DECK LICENSE STRUCTURE

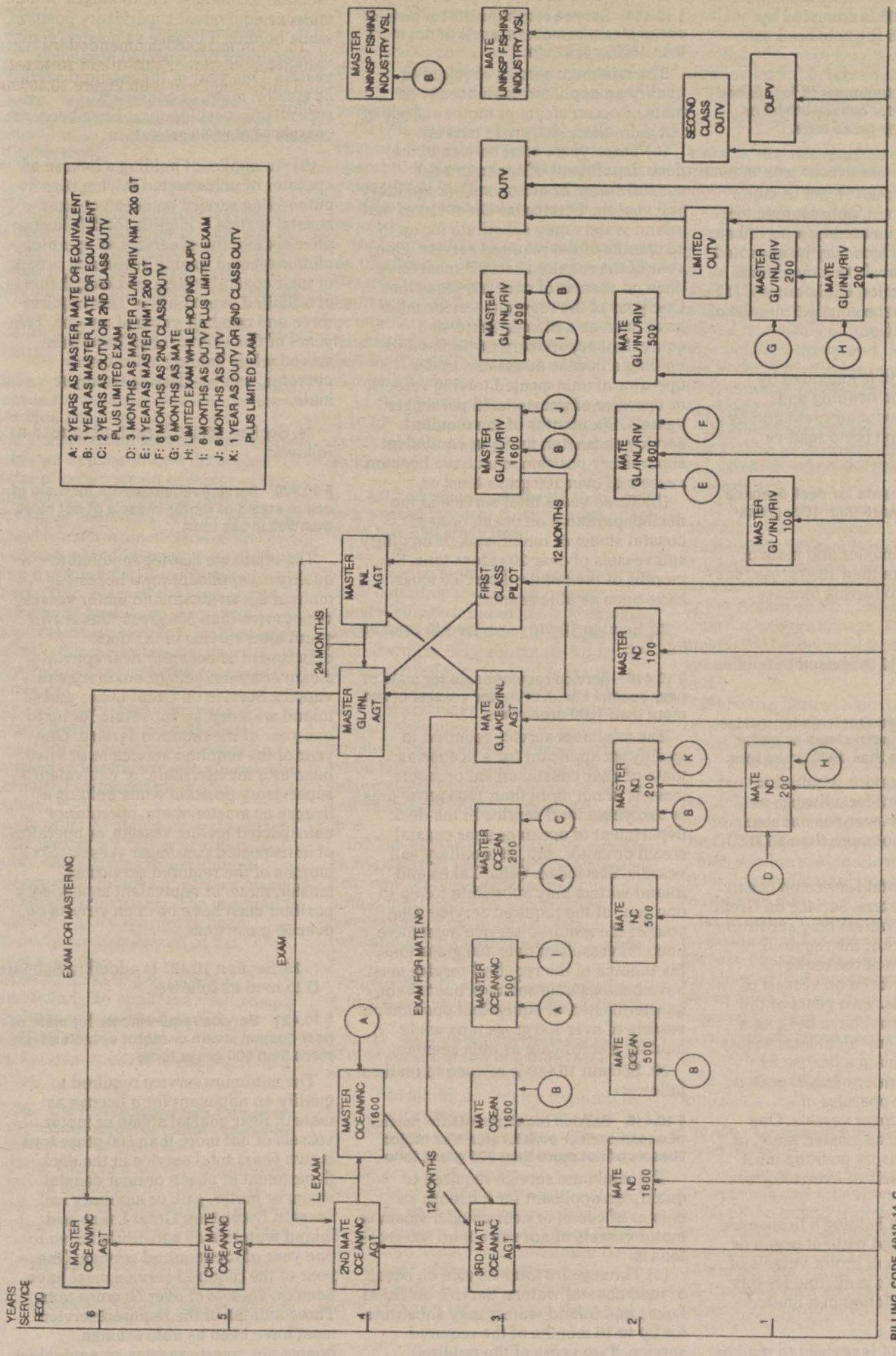

18. Section 10.406 is amended by revising paragraph (b)(2) to read as follows:

§ 10.406 Service requirements for second mate of ocean or near coastal steam or motor vessels of any gross tons.

* * * * *

(b) * * *

(2) Service on ocean steam or motor vessels as boatswain, able seaman, or quartermaster while holding a certificate as able seaman, which may be accepted on a two-for-one basis to a maximum allowable substitution of six months (12 months of experience equals 6 months of creditable service); or,

* * * * *

19. Section 10.410 is amended by revising the section heading and paragraph (a) introductory text and by removing paragraph (c) to read as follows:

§ 10.410 Requirements for deck licenses for vessels of not more than 1600 gross tons.

(a) Licenses as master and mate of vessels of not more than 1600 gross tons are issued in the following tonnage categories:

* * * * *

20. Section 10.412 is revised to read as follows:

§ 10.412 Service requirements for master of ocean or near coastal steam or motor vessels of not more than 1600 gross tons.

The minimum service required to qualify an applicant for a license as master of ocean or near coastal steam or motor vessels of not more than 1600 gross tons is:

(a) Four years total service on ocean or near coastal waters. Service on Great Lakes and inland waters may substitute for up to two years of the required service. Two years of the required service must have been on vessels of over 100 gross tons. Two years of the required service must have been as a master, mate, or equivalent supervisory position while holding a license as master, mate, operator of uninspected towing vessels, or operator of uninspected passenger vessels. One year of the service as master, mate, or equivalent supervisory position must have been on vessels of over 100 gross tons; or,

(b) An applicant holding a license as chief mate or second mate of ocean or near coastal steam or motor vessels of over 1600 gross tons is eligible for this license upon completion of a limited examination.

21. Section 10.414 is revised to read as follows:

§ 10.414 Service requirements for mate of ocean steam or motor vessels of not more than 1600 gross tons.

The minimum service required to qualify an applicant for a license as mate of ocean steam or motor vessels of not more than 1600 gross tons is:

(a) Three years total service in the deck department of ocean or near coastal steam or motor, sail, or auxiliary sail vessels. Service on Great Lakes and inland waters may substitute for up to 18 months of the required service. One year of the required service must have been on vessels of over 100 gross tons. One year of the required service must have been as a master, mate, or equivalent supervisory position while holding a license as master, mate, operator of uninspected towing vessels, or operator of uninspected passenger vessels. Six months of the required service as master, mate, or equivalent supervisory position must have been on vessels of over 100 gross tons; or,

(b) Three years total service in the deck department on ocean or near coastal steam or motor, sail, or auxiliary sail vessels of over 200 gross tons. Six months of the required service must have been as able seaman.

22. Section 10.416 is revised to read as follows:

§ 10.416 Service requirements for mate of near coastal steam or motor vessels of not more than 1600 gross tons.

The minimum service required to qualify an applicant for a license as mate of near coastal steam or motor vessels of not more than 1600 gross tons is two years total service in the deck department of ocean or near coastal steam or motor, sail, or auxiliary sail vessels. Service on Great Lakes and inland waters may substitute for up to one year of the required service. One year of the required service must have been on vessels of over 100 gross tons. Six months of the required service must have been as able seaman, boatswain, quartermaster, or equivalent position on vessels of over 100 gross tons while holding a certificate as able seaman.

23. Section 10.418 is revised to read as follows:

§ 10.418 Service requirements for master of ocean or near coastal steam or motor vessels of not more than 500 gross tons.

The minimum service required to qualify an applicant for a license as master of ocean or near coastal steam or motor vessels of not more than 500 gross tons is:

(a) Three years total service on ocean or near coastal waters. Service on Great Lakes and inland waters may substitute for up to 18 months of the required service. Two years of the required service must have been as a master, mate, or equivalent supervisory position while holding a license as master, mate, or operator of uninspected passenger vessels. One year of the required service as master, mate, or equivalent supervisory position must have been on vessels of over 50 gross tons.

(b) An applicant holding a license as operator of uninspected towing vessels authorizing service on ocean or near coastal waters is eligible for this license after six months of service as operator of uninspected towing vessels on ocean or near coastal waters and completion of a limited examination. This requires three and one-half years of service. Two years of this service must have been served while holding a license as operator, second-class operator, or mate.

24. Section 10.420 is revised to read as follows:

§ 10.420 Service requirements for mate of ocean steam or motor vessels of not more than 500 gross tons.

The minimum service required to qualify an applicant for a license as mate of ocean steam and motor vessels of not more than 500 gross tons is two years total service in the deck department of ocean or near coastal steam or motor, sail, or auxiliary sail vessels. Service on Great Lakes and inland waters may substitute for up to one year of the required service. One year of the required service must have been as a master, mate, or equivalent supervisory position while holding a license as master, mate, operator of uninspected towing vessels, or operator of uninspected passenger vessels. Six months of the required service as master, mate, or equivalent supervisory position must have been on vessels of over 50 gross tons.

25. Section 10.421 is added to Subpart D to read as follows:

§ 10.421 Service requirements for mate of near coastal steam or motor vessels of not more than 500 gross tons.

The minimum service required to qualify an applicant for a license as mate of near coastal steam or motor vessels of not more than 500 gross tons is two years total service in the deck department of ocean or near coastal steam or motor, sail, or auxiliary sail vessels. Service on Great Lakes and inland waters may substitute for up to one year of the required service. One year of the required service must have been on vessels of over 50 gross tons. Three months of the required service must have been as able seaman, boatswain, quartermaster, or equivalent position on vessels of over 50 gross tons

while holding a certificate as able seaman.

26. Section 10.422 is amended by revising paragraph (b)(4) to read as follows:

§ 10.422 Tonnage limitations and qualifying requirements for licenses as master or mate of vessels of not more than 200 gross tons.

* * * * *

(b) * * *

(4) Six months additional service in the deck department on vessels within the highest tonnage increment on the license. In this case, the tonnage limitation may be raised one increment.

* * * * *

27. Section 10.424 is revised to read as follows:

§ 10.424 Service requirements for master of ocean steam or motor vessels of not more than 200 gross tons.

(a) The minimum service required to qualify an applicant for a license as master of ocean steam or motor vessels of not more than 200 gross tons is:

(1) Three years total service on ocean or near coastal waters. Service on Great Lakes and inland waters may substitute for up to 18 months of the required service. Two years of the required service must have been as master, mate, or equivalent supervisory position while holding a license as master, as mate, or as operator of uninspected passenger vessels; or,

(2) Two years total service as a licensed operator or second-class operator of ocean or near coastal uninspected towing vessels. Completion of a limited examination is also required.

(b) In order to obtain an endorsement on this license for sail or auxiliary sail vessels, the applicant must submit evidence of 12 months of service on sail or auxiliary sail vessels. The required 12 months of service may have been obtained prior to issuance of the master's license.

(c) In addition to any required examination, the applicant must comply with the requirements listed in § 10.401(g) of this subpart.

28. Section 10.426 is revised to read as follows:

§ 10.426 Service requirements for master of near coastal steam or motor vessels of not more than 200 gross tons.

(a) The minimum service required to qualify an applicant for a license as master of near coastal steam or motor vessels of not more than 200 gross tons is:

(1) Two years total service on ocean or near coastal waters. Service on Great Lakes and inland waters may substitute for up to one year of the required service. One year of the required service must have been as a master, mate, or equivalent supervisory position while holding a license as master, as mate, or as operator of uninspected passenger vessels; or,

(2) One year of total service as a licensed operator or second-class operator of ocean or near coastal uninspected towing vessels. Completion of a limited examination is also required.

(b) In order to obtain an endorsement on this license for sail or auxiliary sail vessels, the applicant must submit evidence of 12 months of service on sail or auxiliary sail vessels. The required 12 months of service may have been obtained prior to issuance of the master's license.

29. Section 10.428 is redesignated as § 10.427 and paragraphs (a)(1), and (a)(2), and (b) are revised to read as follows:

§ 10.427 Service requirements for mate of near coastal steam or motor vessels of not more than 200 gross tons.

(a) * * *

(1) Twelve months total service in the deck department of ocean or near coastal steam or motor, sail, or auxiliary sail vessels. Service on Great Lakes and inland waters may substitute for up to six months of the required service; or,

(2) Three months of service in the deck department of steam or motor vessels operating on ocean, near coastal, Great Lakes or inland waters while holding a license as master of inland steam or motor, sail or auxiliary sail vessels of not more than 200 gross tons.

(b) The holder of a license as operator of uninspected passenger vessels with a near coastal route endorsement may obtain this license by successfully completing an examination on rules and regulations for small passenger vessels.

* * * * *

30. Section 10.429 is redesignated as § 10.428 and revised to read as follows:

§ 10.428 Service requirements for master of near coastal steam or motor vessels of not more than 100 gross tons.

(a) The minimum service required to qualify an applicant for a license as master of near coastal steam or motor vessels of not more than 100 gross tons is two years total service in the deck department of steam or motor, sail, or auxiliary sail vessels on ocean or near coastal waters. Service on Great Lakes and inland waters may substitute for up to one year of the required service.

(b) In order to obtain an endorsement on this license for sail or auxiliary sail vessels, the applicant must submit evidence of 12 months of service on sail or auxiliary sail vessels. The required 12 months of service may have been obtained prior to issuance of the license.

31. New § 10.429 is added to Subpart D to read as follows:

§ 10.429 Service requirements for limited master of near coastal steam or motor vessels of not more than 100 gross tons.

(a) Limited masters' licenses for near coastal vessels of not more than 100 gross tons may be issued to applicants to be employed by organizations such as yacht clubs, marinas, formal camps and educational institutions. A license issued under this section is limited to the specific activity and the locality of the yacht club, marina or camp. In order to obtain this restricted license, an applicant must:

(1) Have four months of service on any waters in the operation of the type of vessel for which the license is requested;

(2) Satisfactorily complete a safe boating course approved by the National Association of State Boating Law Administrators, or a safe boating course conducted by the U.S. Power Squadron or the American Red Cross, or a Coast Guard approved course. This course must have been completed within five years before the date of application; and,

(3) Pass a limited examination appropriate for the activity to be conducted and the route authorized.

(b) The first aid and cardiopulmonary resuscitation (CPR) course certificates required by § 10.201(h) of this part will only be required when, in the opinion of the OCMI, the geographic area over which service is authorized precludes obtaining medical services within a reasonable time.

(c) In order to obtain an endorsement on this license for sail or auxiliary sail vessels, the applicant must submit evidence of four months of service on sail or auxiliary sail vessels. The required four months of service may have been obtained prior to issuance of the license.

32. Section 10.430 is revised to read as follows:

§ 10.430 Licenses for the Great Lakes and inland waters.

Any license issued for service on the Great Lakes and inland waters is valid on all of the inland waters of the United States as defined in this part. Any license issued for service on inland waters is valid for the inland waters of the United States, excluding the Great Lakes. Licenses with either a Great

Lakes and inland or an inland route are valid for service on the sheltered waters of the Inside Passage between Puget Sound and Cape Spencer, Alaska. As these licenses authorize service on waters seaward of the International Regulations for Preventing Collisions at Sea (COLREGS) demarcation line as defined in 33 CFR Part 80, the applicant must complete an examination on the COLREGS or the license must be endorsed with an exclusion from such waters.

§ 10.440 [Removed]

33. Section 10.440 is removed.

34. Section 10.442 is revised to read as follows:

§ 10.442 Service requirements for master of Great Lakes and inland steam or motor vessels of not more than 1600 gross tons.

The minimum service required to qualify an applicant for a license as master of Great Lakes and inland steam or motor vessels of not more than 1600 gross tons is:

(a) Three years total service on vessels. Eighteen months of the required service must have been on vessels of over 100 gross tons. One year of the required service must have been as a master, mate, or equivalent supervisory position on vessels of over 100 gross tons while holding a license as master, as mate, or as operator of uninspected towing vessels; or,

(b) Six months of service as operator on vessels of over 100 gross tons while holding a license as operator of uninspected towing vessels.

35. Section 10.444 is revised to read as follows:

§ 10.444 Service requirements for mate of Great Lakes and inland steam or motor vessels of not more than 1600 gross tons.

The minimum service required to qualify an applicant for license as mate of Great Lakes and inland steam or motor vessels of not more than 1600 gross tons is:

(a) Two years total service in the deck department of steam or motor, sail, or auxiliary sail vessels. One year of the required service must have been on vessels of over 100 gross tons. Six months of the required service must have been as able seaman, boatswain, quartermaster, or equivalent position on vessels of over 100 gross tons while holding a certificate as able seaman; or,

(b) One year total service as master of steam or motor, sail, or auxiliary sail vessels, or operator of uninspected passenger vessels, of over 50 gross tons while holding a license as master steam or motor, sail, or auxiliary sail vessels of not more than 200 gross tons or operator of uninspected passenger vessels; or,

(c) Six months total service as second-class operator of uninspected towing vessels on vessels of over 100 gross tons.

36. New section 10.446 is added to Subpart D to read as follows:

§ 10.446 Service requirements for master of Great Lakes and inland steam or motor vessels of not more than 500 gross tons.

The minimum service required to qualify an applicant for a license as master of Great Lakes and inland steam or motor vessels of not more than 500 gross tons is:

(a) Three years total service on vessels. One year of the required service must have been as a master, mate, or equivalent supervisory position on vessels of over 50 gross tons while holding a license as master, as mate, or as operator of uninspected passenger vessels.

(b) An applicant holding a license as operator of ocean, near coastal, or Great Lakes and inland uninspected towing vessels is eligible for this license after six months of service as operator of uninspected towing vessels and completion of a limited examination. This requires three and one-half years of service. Two years of this service must have been served while holding a license as operator or second-class operator of uninspected towing vessels, or mate.

37. New section 10.448 is added to Subpart D to read as follows:

§ 10.448 Service requirements for mate of Great Lakes and inland steam or motor vessels of not more than 500 gross tons.

The minimum service required to qualify an applicant for a license as mate of Great Lakes and inland steam or motor vessels of not more than 500 gross tons is two years total service in the deck department of steam or motor, sail, or auxiliary sail vessels. One year of the required service must have been on vessels of over 50 gross tons. Three months of the required service must have been as able seaman, boatswain, quartermaster, or equivalent position on vessels of over 50 gross tons while holding a certificate as able seaman.

38. Section 10.452 is revised to read as follows:

§ 10.452 Service requirements for master of Great Lakes and inland steam or motor vessels of not more than 200 gross tons.

(a) The minimum service required to qualify an applicant for a license as master of Great Lakes and inland steam or motor vessels of not more than 200 gross tons is one year of service on vessels. Six months of the required service must have been as master, mate, or equivalent supervisory position while holding a license as master, mate, operator or second-class operator of uninspected towing vessels, or operator of uninspected passenger vessels. To obtain authority to serve on the Great Lakes, three months of the required service must have been on Great Lakes waters, otherwise the license will be limited to the inland waters of the United States (excluding the Great Lakes).

(b) In order to obtain an endorsement on this license for sail or auxiliary sail vessels, the applicant must have six months of service on sail or auxiliary sail vessels. The required six months of service may have been obtained prior to issuance of the master's license.

39. Section 10.454 is amended by revising paragraphs (a) and (d) to read as follows:

§ 10.454 Service requirements for mate of Great Lakes and inland steam or motor vessels of not more than 200 gross tons.

(a) The minimum service required to qualify an applicant for a license as mate of Great Lakes and inland steam or motor vessels of not more than 200 gross tons is six months of service in the deck department of steam or motor, sail, or auxiliary sail vessels. To obtain authority to serve on the Great Lakes, three months of the required service must have been on Great Lakes waters, otherwise the license will be limited to the inland waters of the United States (excluding the Great Lakes).

* * * * *

(d) The holder of a license as operator of inland uninspected passenger vessels may obtain this license by successfully completing an examination on rules and regulations for small passenger vessels. To obtain authority to serve on the Great Lakes, three months of the required service must have been on Great Lakes waters, otherwise the license will be limited to the inland waters of the United States (excluding the Great Lakes).

* * * * *

40. Section 10.455 is redesignated as § 10.456, paragraph (b) is revised, and a new paragraph (d) is added to read as follows:

§ 10.456 Service requirements for limited master of Great Lakes and inland steam or motor vessels of not more than 100 gross tons.

* * * * *

(b) Satisfactorily complete a safe boating course approved by the National Association of State Boating Law

Administrators, a public education course conducted by the U.S. Power Squadron or the American Red Cross, or a Coast Guard approved course. This course must have been completed within five years before the date of application; and,

* * * * *

(d) The first aid and cardiopulmonary resuscitation (CPR) course certificates required by § 10.201(h) of this part will only be required when, in the opinion of the OCMI, the geographic area over which service is authorized precludes obtaining medical services within a reasonable time.

41. New § 10.455 is added to Subpart D to read as follows:

§ 10.455 Service requirements for master of Great Lakes and inland steam or motor vessels of not more than 100 gross tons.

(a) The minimum service required to qualify an applicant for a license as master of Great Lakes and inland steam or motor vessels of not more than 100 gross tons is one year of total service in the deck department of steam or motor, sail, or auxiliary sail vessels. To obtain authority to serve on the Great Lakes, three months of the required service must have been on Great Lakes waters, otherwise the license will be limited to the inland waters of the United States (excluding the Great Lakes).

(b) In order to obtain an endorsement on this license for sail or auxiliary sail vessels, the applicant must submit evidence of six months of service on sail or auxiliary sail vessels. The required six months of service may have been obtained prior to issuance of the license.

§ 10.456 [Redesignated as § 10.457]

42. Section 10.456 is redesignated as 10.457.

43. Section 10.459 is added to Subpart D to read as follows:

§ 10.459 Service requirements for master or mate of rivers.

(a) An applicant for a license as master of river steam or motor vessels of any gross tons must meet the same service requirements as master of inland steam or motor vessels of any gross tons.

(b) An applicant for a license as master or mate of river steam or motor vessels, with a limitation of 25–1600 gross tons, must meet the same service requirements as those required by this Subpart for the corresponding tonnage Great Lakes and inland steam or motor license. Service on the Great Lakes is not, however, required.

§ 10.460 [Removed]

44. Section 10.460 (including Figure 10.460) is removed.

45. Section 10.462 is amended by revising paragraphs (b), (c), and (d) to read as follows:

§ 10.462 Licenses for master or mate of uninspected fishing industry vessels.

* * * * *

(b) Licenses as master or mate of uninspected fishing industry vessels are issued for either ocean or near coastal routes, depending on the examination completed. To qualify for an uninspected fishing industry vessel license, the applicant must satisfy the training and examination requirements of § 10.401(g) of this subpart.

(c) An applicant for a license as master of uninspected fishing industry vessels must have four years of total service on ocean or near coastal routes. Service on Great Lakes or inland waters may substitute for up to two years of the required service. One year of the required service must have been as licensed master, as unlicensed master, or as licensed mate or equivalent supervisory position while holding a license as master, mate, operator of uninspected towing vessels, or operator of uninspected passenger vessels.

(1) To qualify for a license of not more than 500 gross tons, at least two years of the required service, including the one year as master, mate or equivalent, must have been on vessels of over 50 gross tons.

(2) To qualify for a license of not more than 1600 gross tons, at least two years of the required service, including the one year as master, mate or equivalent, must have been on vessels of over 100 gross tons.

(3) To qualify for a license of over 1600 gross tons, but not more than 5000 gross tons, the vessel tonnage upon which the four years of required service was obtained will be used to compute the tonnage. The license is limited to the maximum tonnage on which at least 25 percent of the required service was obtained, or 150 percent of the maximum tonnage on which at least 50 percent of the service was obtained, whichever is higher. Limitations are in multiples of 1000 gross tons, using the next higher figure when an intermediate tonnage is calculated. A license as master of uninspected fishing industry vessels authorizing service on vessels over 1600 gross tons also requires one year as master, mate or equivalent on vessels over 100 gross tons.

(4) The tonnage limitation on this license may be raised using one of the following methods, but cannot exceed 5000 gross tons. Limitations are in multiples of 1000 gross tons, using the next higher figure when an intermediate tonnage is calculated.

(i) Three months service as master on a vessel results in a limitation in that capacity equal to the tonnage of that vessel rounded up to the next multiple of 1000 gross tons;

(ii) Six months service as master on a vessel results in a limitation in that capacity equal to 150% of the tonnage of that vessel;

(iii) Six months service as master on vessels over 1600 gross tons results in raising the limitation to 5000 gross tons;

(iv) Six months service as mate on vessels over 1600 gross tons results in raising the limitation for master to the tonnage on which at least 50 percent of the service was obtained;

(v) Two years service as a deckhand on a vessel while holding a license as master results in a limitation on the master's license equal to 150% of the tonnage of that vessel up to 5000 gross tons; or,

(vi) One year of service as deckhand on a vessel while holding a license as master results in a limitation on the master's license equal to the tonnage of that vessel.

(d) An applicant for a license as mate of uninspected fishing industry vessels must have three years of total service on ocean or near coastal routes. Service on Great Lakes or inland waters may substitute for up to 18 months of the required service.

(1) To qualify for a license of not more than 500 gross tons, at least one year of the required service must have been on vessels of over 50 gross tons.

(2) To qualify for a license of not more than 1600 gross tons, at least one year of the required service must have been on vessels of over 100 gross tons.

(3) To qualify for a license of over 1600 gross tons, but not more than 5000 gross tons, the vessel tonnage upon which the three years of required service was obtained will be used to compute the tonnage. The license is limited to the maximum tonnage on which at least 25 percent of the required service was obtained, or 150 percent of the maximum tonnage on which at least 50 percent of the service was obtained, whichever is higher. Limitations are in multiples of 1000 gross tons, using the next higher figure when an intermediate tonnage is calculated.

(4) The tonnage limitation on this license may be raised using one of the following methods, but cannot exceed 5000 gross tons. Limitations are in multiples of 1000 gross tons, using the next higher figure when an intermediate tonnage is calculated.

(i) Three months service as mate on a vessel results in a limitation in that capacity equal to the tonnage of that vessel rounded up to the next multiple of 1000 gross tons;

(ii) Six months service as mate on a vessel results in a limitation in that capacity equal to 150% of the tonnage of that vessel;

(iii) Six months service as mate on vessels over 1600 gross tons results in raising the limitation to 5000 gross tons;

(iv) One year of service as deckhand on vessels over 1600 gross tons while holding a license as mate, results in raising the limitation on the mate's license to 5000 gross tons;

(v) Two years service as a deckhand on a vessel while holding a license as mate results in a limitation on the mate's license equal to 150% of the tonnage of that vessel up to 5000 gross tons; or,

(vi) One year of service as deckhand on a vessel while holding a license as mate results in a limitation on the mate's license equal to the tonnage of that vessel.

* * * * *

46. Section 10.464 is amended by revising the introductory text in paragraph (e) to read as follows:

§ 10.464 Licenses for operator of uninspected towing vessels.

* * * * *

(e) In order to obtain an operator or second-class operator license for ocean (domestic trade) waters, whether an original, raise in grade, or increase in scope, the applicant must complete the following training and examination requirements:

* * * * *

47. Section 10.466 is amended by revising paragraph (a), by redesignating paragraphs (e), (f) and (g) as paragraphs (f), (g) and (h), respectively, by redesignating paragraphs (c) and (d) as paragraphs (e) and (c), respectively, by adding a new paragraph (d), and by adding a new paragraph (g)(4) to read as follows:

§ 10.466 Licenses for operator of uninspected passenger vessels.

(a) This section applies to all applicants for the license to operate an uninspected vessel of less than 100 gross tons, equipped with propulsion machinery of any type, carrying six or less passengers.

* * * * *

(d) For a license as operator of an uninspected passenger vessel with a Great Lakes and inland waters endorsement, an applicant must have 12 months service on Great Lakes or inland waters, including at least three months service operating vessels on Great Lakes waters.

(g) * * *

(4) The first aid and cardiopulmonary resuscitation (CPR) course certificates required by § 10.201(h) of this part will only be required when, in the opinion of the OCMI, the geographic area over which service is authorized precludes obtaining medical services within a reasonable time.

48. Section 10.480 is amended by revising paragraph (k) to read as follows:

§ 10.480 Radar observer.

* * * * *

(k) An applicant seeking to raise the grade of a license or increase its scope, where that increased grade or scope requires a radar observer certificate, may use an expired radar observer certificate to fulfill that requirement.

49. Section 10.501 is amended by revising the introductory text of paragraph (b) to read as follows:

§ 10.501 Grade and type of engineer licenses issued.

* * * * *

(b) Engineer licenses issued in the grades of chief engineer (limited) and assistant engineer (limited) of steam and/or motor vessels allow the holder to serve within any horsepower limitations on vessels of any gross tons on inland waters and of not more than 1600 gross tons in ocean, near coastal or Great Lakes service in the following manner:

* * * * *

50. Section 10.502 is amended by revising the introductory text in paragraph (b), and by adding paragraph (c) to read as follows:

§ 10.502 Additional requirements for engineer licenses.

* * * * *

(b) If a licensed applicant desires to obtain an endorsement on an engineer license in the other propulsion mode (steam or motor), the following alternative methods, while holding a license in that grade, are acceptable:

* * *

(c) Applicants for an original, raise in grade, or increase in the scope, of an engineer license, other than an increase in horsepower limitation, who have not previously done so must meet the requirements of § 10.205(g) of this part.

51. Section 10.504 is redesignated as § 10.505 and newly designated Figure 10.505 is revised to read as follows:

BILLING CODE 4910-14-M

FIGURE 10.505 ENGINEER LICENSE STRUCTURE

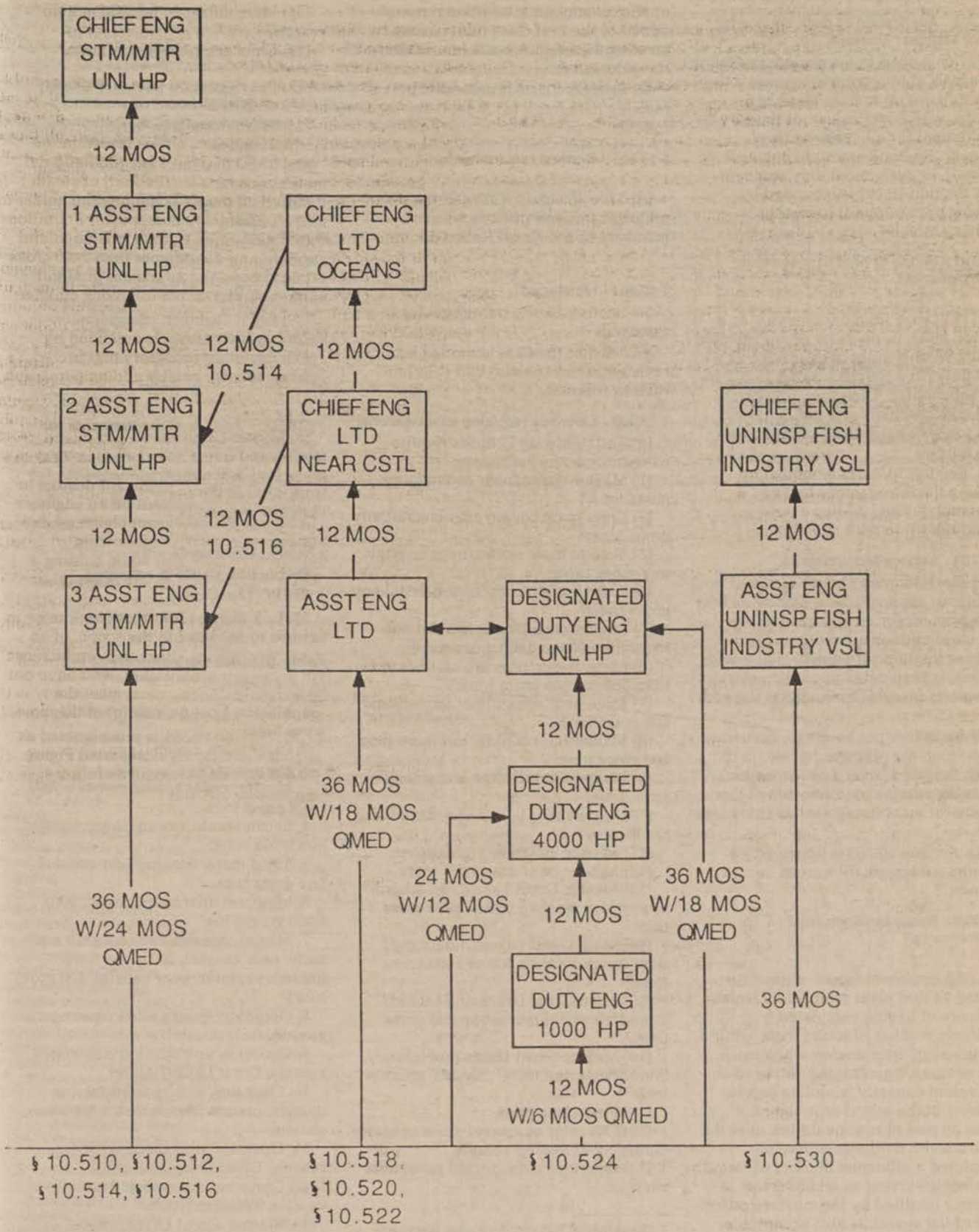

BILLING CODE 4910-14-C

52. New section 10.504 is added to Subpart E to read as follows:

§ 10.504 Application of deck service for limited engineer licenses.

Service gained in the deck department on vessels of appropriate tonnage may substitute for up to 25 percent or 6 months, whichever is less, of the service requirement for a license as chief engineer (limited), assistant engineer (limited), or designated duty engineer.

53. Section 10.701 is amended by revising paragraph (d) to read as follows:

§ 10.701 Scope of pilot licenses and endorsements.

* * * * *

(d) A license issued for service as a master, mate, or operator of uninspected towing vessels authorizes service as a pilot under the provisions of § 15.812 of this subchapter. Therefore, first class pilot endorsements will not be issued with tonnage limitations of 1600 gross tons or less.

54. Section 10.703 is amended by revising the introductory text of paragraph (a) and adding a new paragraph (d) to read as follows:

§ 10.703 Service requirements.

(a) The minimum service required to qualify an applicant for a license as first class pilot, or for an endorsement as first class pilot on a license as master, mate, or operator of uninspected towing vessels, is predicated upon the nature of the waters for which pilotage is desired.

* * * * *

(d) An individual holding a license as master or mate of inspected steam or motor vessels of over 1,600 gross tons meets the service requirements of this section for an endorsement as first class pilot.

54a. Section 10.705 is amended by revising paragraph (b) to read as follows:

§ 10.705 Route familiarization requirements.

* * * * *

(b) An applicant for an original license as first class pilot shall furnish evidence of having completed a minimum number of round trips, while serving as quartermaster, wheelsman, able seaman, apprentice pilot, or in an equivalent capacity, standing regular watches at the wheel or in the pilot house as part of routine duties, over the route sought. Evidence of having completed a minimum number of round trips while serving as an observer, properly certified by the master and/or pilot of the vessel, is also acceptable. The range of round trips for an initial license is a minimum of 12 round trips and a maximum of 20 round trips. An applicant may have additional routes added to the first class pilot license by meeting the requirements for obtaining an endorsement.

55. Section 10.805 is amended by revising paragraph (d) to read as follows:

§ 10.805 General requirements.

* * * * *

(d) Title 46 U.S.C. 8302 addresses uniforms for staff officers who are members of the Naval Reserve.

* * * * *

§ 10.901 [Amended]

56. Section 10.901, paragraph (c) is removed.

57. Section 10.903 is amended by revising paragraphs (a) and (b)(2) to read as follows:

§ 10.903 Licenses requiring examinations.

(a) The following licenses require examinations for issuance:

(1) Master ocean/near coastal any gross tons;[1]

(2) Chief mate ocean/near coastal any gross tons;[1]

(3) Second mate ocean/near coastal any gross tons;[1]

(4) Third mate ocean/near coastal any gross tons;[1]

(5) Master ocean/near coastal not more than 500 or 1600 gross tons;[1]

(6) Mate ocean/near coastal not more than 500 or 1600 gross tons;[1]

(7) Mate near coastal not more than 200 gross tons;

(8) Master near coastal not more than 100 gross tons;

(9) Master Great Lakes and inland any gross tons;

(10) Mate Great Lakes and inland any gross tons;

(11) Master inland any gross tons;

(12) Master river any gross tons;

(13) Master Great Lakes and inland/river not more than 500 or 1600 gross tons;[1]

(14) Mate Great Lakes and inland/river not more than 500 or 1600 gross tons;[1]

(15) Mate Great Lakes and inland/inland/river not more than 200 gross tons;[1]

(16) Master Great Lakes and inland/inland/river not more than 100 gross tons;[1]

(17) First class pilot;

(18) Operator or second-class operator uninspected towing vessels;

(19) Operator uninspected passenger vessels;

(20) Master uninspected fishing industry vessels;

(21) Mate uninspected fishing industry vessels;

(22) Chief engineer steam/motor vessels;

(23) First assistant engineer steam/motor vessels;

(24) Second assistant engineer steam/motor vessels;

(25) Third assistant engineer steam/motor vessels;

(26) Chief engineer (limited) steam/motor vessels;

(27) Assistant engineer (limited) steam/motor vessels;

(28) Designated duty engineer steam/motor vessels;

(29) Chief engineer uninspected fishing industry vessels;

(30) Assistant engineer uninspected fishing industry vessels.

* * * * *

(b) * * *

(2) Master Great Lakes and inland, inland, and rivers not more than 200 gross tons when raising license grade from mate of the same route not more than 200 gross tons.

* * * * *

§ 10.905 [Removed]

58. Section 10.905 is removed.

§ 10.910 [Amended]

59. In § 10.910, table 10.910–1 is revised to read as follows:

Table 10.910–1 Codes for Deck Licenses

Deck Licenses:

1. Master, Oceans/near coastal, any gross tons.
2. Chief mate, oceans/near coastal, any gross tons.
3. Master, oceans/near coastal, 500/1,600 gross tons.
4. Second mate, oceans/near coastal, any gross tons.
5. Third mate, oceans/near coastal, any gross tons.
6. Mate, oceans/near coastal, 500/1,600 gross tons.
7. Master, oceans/near coastal, and mate, near coastal, 200 gross tons (includes master, near coastal, 100 gross tons).
8. Operator, uninspected passenger vessels, near coastal.
9. Operator, uninspected passenger vessels, Great Lakes/inland.
10. Operator, uninspected towing vessels, oceans (domestic trade)/near coastal.
11. Operator, uninspected towing vessels, Great Lakes/inland.
12. Operator, uninspected towing vessels, Western rivers.
13. Master, Great Lakes/inland, or master, inland, any gross tons.

[1] Examination will vary depending upon route desired.

14. Mate, Great Lakes/inland, any gross tons.

15. Master, Great Lakes/inland, 500/1,600 gross tons.

16. Mate, Great Lakes/inland, 500/1,600 gross tons.

17. Master or mate, Great Lakes/inland, 200 gross tons (includes master, Great Lakes/inland, 100 gross tons).

18. Master, rivers, any gross tons.

19. Master, rivers, 500/1,600 gross tons.

20. Mate, rivers, 500/1,600 gross tons.

21. Master or mate, rivers, 200 gross tons (includes master, rivers, 100 gross tons).

22. Master, uninspected fishing industry vessels, oceans/near coastal.

23. Mate, uninspected fishing industry vessels, oceans/near coastal.

24. First class pilot.

60. In § 10.910, table 10.910–2 is revised to read as follows:

TABLE 10.910–2—LICENSE CODES

Examination topics	1	2	3	4	5	6	7	8	9	10	11	12	13	14	15	16	17	18	19	20	21	22	23	24
Navigation and position determination:																								
Ocean Track Plotting:																								
Middle Latitude Sailing	1	1		1	1																			
Mercator Sailing	X	X		1	1																			
Great Circle Sailing	1	1		1																				
Parallel Sailing	1	1		1	1																			
ETA	X	X	1	X	X																			
Piloting:																								
Distance Off		X	X	X	X	X	X	X	X	X	X		X	X	X	X	X					X	X	X
Bearing Problems		X	X	X	X	X	X	X	X	X	X		X	X	X	X	X					X	X	X
Fix or Running Fix		X	X	X	X	X	X	X	X	X	X		X	X	X	X	X					X	X	X
Chart Navigation		X	X	X	X	X	X	X	X	X	X	2	X	X	X	X	X	2	2	2	2	X	X	X
Dead Reckoning		X	X	X	X	X	X	X	X	X	X		X	X	X	X	X					X	X	X
Celestial Observations:																								
Special Cases (hi/lo Alt., Backsight)	1																							
Latitude by Polaris	1	1	1	1																				
Latitude by Meridian Transit	1																							
Lat. by Meridian Transit (Sun Only)	X	X	1	X	X	1	1			1												1	1	
Fix or Running Fix (Any Body)	X	X	1	X																		1		
Fix or Running Fix (Sun Only)					X	1	1			1													1	
Star Identification	1	1	1	1																				
Star Selection	1	X	1	X																			1	
Times of Celestial Phenomena:																								
Time of Meridian Transit	1																							
Time of Meridian Transit (Sun Only)	X	X	1	X	X	1	1			1												1	1	
Second Estimate Meridian Transit	1																							
Zone Time Sun Rise/Set/Twilight	X	X	1	1	1	1	1			1													1	1
Zone Time Moon Rise/Set	X	X		1																				
Speed by RPM	X	X		X									3											
Fuel Conservation	X	X											3											
Electronic Navigation	X	X	X	X	X	X	X	X	X	X	X		X	X	X	X	X					X	X	X
Instruments and Accessories	X	X	X	X	X	X	X	X	X	X	X	X	X	X	X	X	X	X	X	X	X	X	X	X
Aids To Navigation	X	X	X	X	X	X	X	X	X	X	X	X	X	X	X	X	X	X	X	X	X	X	X	X
Charts, Navigation Publications, and Notices to Mariners	X	X	X	X	X	X	X	X	X	X	X	X	X	X	X	X	X	X	X	X	X	X	X	X
Naut. Astronomy & Nav. Definitions	X	X		X	X																			
Chart Sketch																								4
Seamanship:																								
Marlinspike Seamanship				X	X	X	X	X	X	X	X	X		X		X	X	X	X	X	X	X	X	X
Purchases, Blocks and Tackle				X	X	X	X			X	X	X		X		X	X	X	X	X	X	X	X	X
Small Boat Handling Under Oars or Sail				X	X								X	X										
Watchkeeping:																								
COLREGS	X	X	X	X	X	X	X	X	5	X	5		5	5	5	5	5					X	X	5
Inland Navigational Rules	X	X	X	X	X	X	X	X	X	X	X	X	X	X	X	X	X	X	X	X	X	X	X	X
Basic Principles, Watchkeeping	X	X	X	X	X	X	X			X	X	X	X	X	X	X	X	X	X	X	X			
Navigation Safety Regs. (33 CFR 164)	X	X		X	X								X	X			X					6	6	6
Radar Equipment:																								
Radar Observer Certificate	X	X	X	X	X	X	1			1			X	X			X					X	X	X
Compass-Magnetic and Gyro:																								
Principles of Gyro Compass	X	X	X	X	X	X							X	X	X	X						X	X	
Principles of Magnetic Compass	X	X	X	X	X	X						X	X	X	X	X	X	X	X	X	X	X	X	X
Magnetic Compass Adjustment	X	X											X	X										
Gyro Compass Error/Correction	X	X	X	X	X	X	7				X	X	X	X	X	X	7					X	X	X
Magnetic Compass Error/Correction	X	X	X	X	X	X	X	X	X	X	X		X	X	X	X	X					X	X	X
Determination of Compass Error:																								
Azimuth (Any Body)	X	X		1																				
Azimuth (Sun Only)			1		X	1	1			1			3									1	1	
Amplitude (Any Body)	X																							
Amplitude (Sun Only)		X	1	X	X	1	1			1			3									1	1	
Deviation Table Construction	X	X	1	X	X								3											
Terrestrial Observation		X	X	X	X	X	X	X	X	X	X		X	X	X	X	X					X	X	X
Gyro Controlled Systems	X	X	X	X		X																		
Operation & Care of Main Gyro Systems	X	X	X	X		X																		
Meteorology and Oceanography:																								
Characteristics of Weather Systems		X	X	X	X	X	X	X	X	X	X	X	X	X	X	X	X	X	X	X	X	X	X	X
Ocean Current Systems		X	X	X	X																	X	X	
Weather Charts and Reports		X	X	X	X		X			X												X		

TABLE 10.910-2—LICENSE CODES—Continued

Examination topics	1	2	3	4	5	6	7	8	9	10	11	12	13	14	15	16	17	18	19	20	21	22	23	24
Tides and Tidal Currents:																								
Extensive Tidal Effects	X	X	X																					
Terms and Definitions		X	X	X	X	X	X	X	X	X	X		X	X	X	X	X					X	X	X
Publications		X	X	X	X	X	X	X	X	X	X		X	X	X	X	X					X	X	X
Calculations		X	X	X	X	X	X	X	X	X	X		X	X	X	X	X					X	X	X
Ship Maneuvering and Handling:																								
Approaching Pilot Vessel or Station	X	X	X			X																		X
Shiphandling in Rivers, Estuaries	X	X	X			X	X	X	X	X	X	X	X	X	X	X	X	X	X	X	X	X		X
Maneuvering in Shallow Water	X	X	X			X	X	X	X	X	X	X	X	X	X	X	X	X	X	X	X	X		X
Interaction with Bank/Passing Ship	X	X	X			X	X	X	X	X	X	X	X	X	X	X	X	X	X	X	X	X		X
Berthing and Unberthing	X	X	X			X	X	X	X	X			X	X	X		X	X	X		X	X		X
Anchoring and Mooring		X	X	X	X	X	X	X	X	X			X	X	X	X	X					X	X	X
Dragging, Clearing Fouled Anchors		X	X	X	X	X	X						X	X	X	X	X					X		
Drydocking, with & without Prior Damage		X	X																					
Heavy Weather Operations		X	X				X	X	X								X					X	X	
Maneuvering for Launching of Lifeboats and Liferafts in Heavy Weather		X	X				X			X			X		X							X	X	
Receiving Survivors From Lfbts/Lfrfts		X	X				X			X	X													
General: Turn Circle, Pivot Point, Advance and Transfer				X	X	X	X	X	X	X	X	X	X	X	X	X	X	X	X	X	X	X	X	X
Determine Maneuvering Characteristics of Major Vessel Types		X		X	X																			
Wake Reduction		X	X				X	X	X	X	X	X	X	X	X	X	X	X	X	X	X	X		X
Ice Operations/Ice Navigation	X	X	X			X				X	X	X	X	3	X	3								
Towing Operations		X	X	X	X	X	X			X	X	X		X		X	X	X	X	X	X			
Ship Stability, Construction, and Damage Control:																								
Principles of Ship Construction		X	X	X	X		X						X	3	X	3	X	X	X					
Trim and Stability	X	X	X	X	X	X	X			X	X	X	X	3	X	3	X	X	X		X	X	X	
Damage Trim and Stability	X	X	X			X	7																	
Stability, Trim, and Stress Calculation	X	X	X	X			7																	
Vessel Structural Members		X	X	X	X	X	7							X	X	3	7							
IMO Ship Stability Recommendations	X	X																						
Damage Control	X	X	X			X		7								7								
Change in Draft Due to Density	X	X																						
Ship Power Plants:																								
Marine Power Plant Operating Principles		X	X				7						X		X		7	X	X					
Ships' Auxiliary Machinery		X	X									X			X			X	X					
Marine Engineering Terms		X	X				7						X		X		7	X	X					
Small Engine Operations and Maintenance							X	X	X								X			X				
Cargo Handling and Stowage:																								
Cargo Stowage and Security, Including Cargo Gear		X	X	X	X	X	7						X	X	X	X	7	X	X	X				
Loading and Discharging Operations		X	X	X	X	X							X	X	X	X		X	X	X				
International Regulations for Cargoes, Especially IMDG	X	X	X																					
Dangerous/Hazardous Cargo Regulations	X	X	X	X	X	X							X	X	X	X		X	X	X				
Tank Vessel Safety		X	X	X	X	X							X	X	X	X		X	X	X				
Cargo Piping and Pumping Systems		X	X	X	X	X							X	X	X	X		X	X	X				
Cargo Oil Terms and Definitions		X	X	X	X	X							X	X	X	X		X	X	X				
Ballasting, Tank Clean., & Gas Free Ops		X	X	X	X	X						X	X	X	X		X	X	X					
Load on Top Procedures		X	X	X	X	X						X	X	X	X		X	X	X					
Barge Regulations (Operations)										X	X	X												
Fire Prevention and Firefighting Appliances:		X	X	X	X	X	X			X	X	X	X	X	X	X	X	X	X	X	X	X	X	X
Organization of Fire Drills		X	X	X	X	X	X	X	X	X	X	X	X	X	X	X	X	X	X	X	X	X	X	X
Classes and Chemistry of Fire		X	X	X	X	X	X			X	X	X	X	X	X	X	X	X	X	X	X	X	X	X
Firefighting Systems		X	X	X	X	X	7			X	X	X	X	X	X	X	7	X	X	X	7	X	X	
Firefighting Equip. and Regulations							X															X		
Firefighting Equip. & Regs. for T-Boats																	X							
Basic Firefighting and Prevention		X	X	X	X	X	X	X	X	X	X	X	X	X	X	X	X	X	X	X	X	X	X	X
Emergency Procedures:																								
Ship Beaching Precautions		X	X										X		X									
Actions Prior To/After Grounding		X	X										X		X			X	X					
Refloating a Grounded Ship		X	X										X		X			X	X					
Collision		X	X				X	X		X	X	X	X		X			X	X			X		
Temporary Repairs		X	X	X			X	X	X	X	X	X	X	X	X	X	X	X	X	X	X	X	X	X
Passenger/Crew Safety in Emergency		X	X	X	X	X	X	X	X	X	X	X	X	X	X	X	X	X	X	X	X	X		
Fire or Explosion		X	X	X	X	X	X	X	X	X	X	X	X	X	X	X	X	X	X	X	X	X	X	X
Abandon Ship Procedures		X	X	X	X	X	X	X	X	X	X	X	X	X	X	X	X	X	X	X	X	X	X	X
Emergency Steering		X	X	X									X		X			X	X				X	X
Rescuing Surv. From Ship/Airc. in Dist		X	X	X	X	X	X	X		X			X	X	X	X	X	X	X	X				
Man Overboard Procedures		X	X	X	X	X	X	X	X	X	X	X	X	X	X	X	X	X	X	X	X	X	X	X
Emergency Towing	X	X	X				X			X														
Medical Care:																								
Knowledge and use of:																								
Int'l. Medical Guide for Ships		X	X																					
Ship Med. Chest and Med. Aid at Sea		X	X																					
Medical Sec., Inter. Code of Signals		X	X	X	X																			
1st Aid Guide: Accidents with Dangerous Goods		X	X																					
First Aid		X	X	X	X	X	X	X	X	X	X	X	X	X	X	X	X	X	X	X	X	X	X	X
Maritime Law:																								
International Maritime Law:																								
Int'l. Convention on Load Lines	X	X	X																					
SOLAS	X	X	X				7																	
MARPOL 73/78	X	X	X	X	X	X																		

TABLE 10.910–2—LICENSE CODES—Continued

Examination topics	1	2	3	4	5	6	7	8	9	10	11	12	13	14	15	16	17	18	19	20	21	22	23	24
International Health Regulations	X	X	X																					
Other International Instruments for Ship/Pass./Crew/Cargo Safety	X	X	X																					
National Maritime Law:																								
Load Lines	X	X	X			X	X			X	X		3	3	3	3	7							
Cert. and Documentation of Vessels	X	X	X				X	X	X	X	X	X	X		X		X	X	X		X	X		
Rules & Regs. for Inspected Vessels	X	X	X	X	X	X	7						X	X	X	X	7	X	X	X	7			
Rules & Regs. for Inspected T-Boats							X										X				X			
Rules and Regs for Uninsp. Vessels							X	X	X	X	X	X					X				X	X	X	
Pollution Prevention Regulations	X	X	X	X	X	X	X	X	X	X	X	X	X	X	X	X	X	X	X	X	X	X	X	X
Pilotage	X	X	X																					X
Licensing & Certification of Seamen	X	X	X	X	X	X	X	X	X	X	X	X	X	X	X	X	X	X	X	X	X	X	X	
Shipment and Discharge, Manning	X		X				X			X			X		X			X	X					
Title 46 U.S. Code	X	X	X										X		X			X	X					
Captain of the Port Regulations, Vessel Traffic Service Procedures for the Route Desired																								X
Shipboard Management and Training:																								
Personnel Management	X	X	X										X		X			X	X					
Shipboard Organization	X	X	X										X		X			X	X					
Required Crew Training	X	X	X										X		X			X	X					
Ship Sanitation	X	X	X				X	X	X	X	X	X	X	X	X	X	X	X	X	X	X	X	X	
Vessel Alteration/Repair—Hot Work	X	X	X				X						X		X			X	X					
Safety	X	X	X	X	X	X	X	X	X	X	X	X	X	X	X	X	X	X	X	X	X	X	X	
Ship's Business:																								
Charters	X	X	X																					
Liens, Salvage	X	X	X																					
Insurance	X	X	X																					
Entry, Clearance	X	X	X																					
Certificates and Documents Required	X	X	X	X	X	X	X	X	X	X	X	X	X	X	X	X	X	X	X	X	X	X	X	
Communications:																								
Flashing Light	X	X		X	X																			
Radiotelephone Communications		X	X	X	X	X	X	X	X	X	X	X	X	X	X	X	X	X	X	X	X	X	X	X
Radiotelegraphy Emerg. Dist. Signals		X		X	X																			
Signals: Storm/Wreck/Dist./Special		X	X	X	X	X	X	X	X	X	X		X	X	X	X	X	X	X	X	X	X	X	
International Code of Signals		X	X	X	X																			
Lifesaving:																								
Survival at Sea		X	X	X	X	X	X			X												X	X	
Lifesaving Appliance Regulations		X	X	X	X	X	7						X	X	X		7	X	X	X	7			
Lifesaving Appliance Regs. for T-Boats							X										X				X			
Lifesaving Appliance Operation		X	X	X	X	X	7	X	X	X	X		X	X	X	X	7	X	X	X	7	X	X	
Lifesaving Appliance Ops. for T-Boats							X										X				X			
Search and Rescue:																								
Search and Rescue Procedures	X	X	X																					
AMVER	X	X	X																					
SAIL/AUXILIARY SAIL VESSELS ADDENDUM (8):																								
Any other subject considered necessary to establish the applicant's proficiency	X	X	X	X	X	X	X	X	X	X	X	X	X	X	X	X	X	X	X	X	X	X	X	X

1—For ocean routes only.
2—River chart navigation only.
3—Topic covered only on Great Lakes specific module(s) taken for "Great Lakes and inland" routes.
4—Including recommended courses, distances, prominent aids to navigation, depths of waters in channels and over hazardous shoals, other important features of the route, such as character of the bottom. The OCMI may accept chart sketching of only a portion or portions of the route for long or extended routes.
5—Take COLREGS if license not limited to non-COLREG waters.
6—For licenses over 1600 gross tons.
7—For licenses over 100 gross tons.
8—Sail vessel safety precautions, rules of the road, operations, heavy weather procedures, navigation, maneuvering, and sailing terminology. Applicants for sail/auxiliary sail endorsements to master, mate or operator of uninspected passenger vessels licenses are also tested in the subjects contained in this addendum.

§ 10.950 [Amended]

61. In § 10.950, table 10.950 is revised to read as follows:

TABLE 10.950.—SUBJECTS FOR ENGINEER LICENSES

	Unlimited chief engineer		Unlimited 1st asst. engineer		Unlimited 2nd asst. engineer		Unlimited 3rd asst. engineer		Chief engineer limited		A/E Ltd & DDE unlim.		Unin. ind. C/E	Fish. vsl. A/E	DDE Ltd HP	
	STM	MTR	STM	MTR	STM	MTR	STM	MTR	STM	MTR	STM	MTR	MTR	MTR	STM	MTR
General Subjects:																
Prints and Tables	P-T	P-T	P-T	P-T	P-T	P-T	P-T	P-T	P-T	P-T	P-T	P-T	P-T	P-T	P-T	P-T
Pipes, Fittings, Valves	P-T	P-T	P-T	P-T	P-T	P-T	P-T	P-T	P-T	P-T	P-T	P-T	P-T	P	P	P
Hydraulics	P-T	P-T	P-T	P-T	P-T	P-T	P-T	P-T	P-T	P-T	P-T	P-T	P-T	P	P	P
Bilge Systems	P-T	P-T	P-T	P-T	P-T	P-T	P-T	P-T	P-T	P-T	P-T	P-T	P-T	P	P	P
Sanitary/Sewerage Systems	P-T	P-T	P-T	P-T	P-T	P-T	P-T	P-T	P-T	P-T	P-T	P-T	P-T	P	P	P
Freshwater Systems	P-T	P-T	P-T	P-T	P-T	P-T	P-T	P-T	P	P	P	P	P-T	P	P	P
Lubricants	P-T	P-T	P-T	P-T	P-T	P-T	P-T	P-T	P-T	P-T	P-T	P-T	P-T	P-T	P	P
Lubrication Systems	P-T	P-T	P-T	P-T	P-T	P-T	P-T	P-T	P-T	P-T	P-T	P-T	P-T	P-T	P	P
Automation Systems	P-T	P-T	P-T	P-T	P-T	P-T	P-T	P-T	P-T	P-T	P-T	P-T	P	P	P	P

TABLE 10.950.—SUBJECTS FOR ENGINEER LICENSES—Continued

	Unlimited chief engineer		Unlimited 1st asst. engineer		Unlimited 2nd asst. engineer		Unlimited 3rd asst. engineer		Chief engineer limited		A/E Ltd & DDE unlim.		Unin. Ind. C/E	Fish. vsl. A/E	DDE Ltd HP	
	STM	MTR	STM	MTR	STM	MTR	STM	MTR	STM	MTR	STM	MTR	MTR	MTR	STM	MTR
Control Systems	P-T	P-T	P-T	P-T	P-T	P-T	P-T	P-T	P-T	P-T	P-T	P-T	P	P	P	P
Propellers/Shafting Systems	P-T	P-T	P-T	P-T	P-T	P-T	P-T	P-T	P-T	P-T	P-T	P-T	P	P	P	P
Machine Shop	P-T	P-T	P-T	P-T	P-T	P-T	P-T	P-T	P-T	P-T	P-T	P-T	P	P	P	P
Distilling Systems	P-T	P-T	P-T	P-T	P-T	P-T	P-T	P-T	P-T	P-T	P-T	P-T	P	P	P	P
Pumps	P-T	P-T	P-T	P-T	P-T	P-T	P-T	P-T	P-T	P-T	P-T	P-T	P-T	P-T	P	P
Compressors	P-T	P-T	P-T	P-T	P-T	P-T	P-T	P-T	P-T	P-T	P-T	P-T	P-T	P-T	P	P
Administration	P-T	P-T	P-T	P-T	P-T	P-T	P	P	P	P	P	P	P	P	P	P
Governors	P-T	P-T	P-T	P-T	P-T	P-T	P-T	P-T	P	P	P	P	P	P	P	P
Cooling Systems	P-T	P-T	P-T	P-T	P-T	P-T	P-T	P-T	P-T	P-T	P-T	P-T	P-T	P	P	P
Bearings	P-T	P-T	P-T	P-T	P-T	P-T	P-T	P-T	P-T	P-T	P-T	P-T	P-T	P	P	P
Instruments	P-T	P-T	P-T	P-T	P-T	P-T	P-T	P-T	P-T	P-T	P-T	P-T	P-T	P	P	P
Ship Construction and Repair	P-T	P-T	P-T	P-T	P-T	P-T	P-T	P-T	P-T	P-T	P-T	P-T	P-T	P-T	P	P
Theory	T	T	T	T	T	T	T	T	T	T	T	T	T	T	T	T
Steering Systems	P-T	P-T	P-T	P-T	P-T	P-T	P-T	P-T	P-T	P-T	P-T	P-T	P-T	P-T	P	P
Deck Machinery	P-T	P-T	P-T	P-T	P-T	P-T	P-T	P-T	P-T	P-T	P-T	P-T	P	P	P	P
Ventilation Systems	P-T	P-T	P-T	P-T	P-T	P-T	P-T	P-T	P	P	P	P	P	P	P	P
Thermodynamics	T	T	T	T	T	T	T	T								
Watch Duties	P-T	P-T	P-T	P-T	P-T	P-T	P-T	P-T	P-T	P-T	P-T	P-T	P-T	P	P	P
Refrigeration and Air Conditioning:																
Theory	T	T	T	T	T	T	T	T	T	T	T	T	T	T	T	T
Air Conditioning Systems	P-T	P-T	P-T	P-T	P-T	P-T	P-T	P-T	P-T	P-T	P-T	P-T	P	P	P	P
Refrigeration Systems	P-T	P-T	P-T	P-T	P-T	P-T	P-T	P-T	P-T	P-T	P-T	P-T	P	P	P	P
Control Systems	P-T	P-T	P-T	P-T	P-T	P-T	P-T	P-T	P-T	P-T	P-T	P-T	P	P	P	P
Safety	P-T	P-T	P-T	P-T	P-T	P-T	P-T	P-T	P-T	P-T	P-T	P-T	P-T	P	P	P
Casualty Control	P-T	P-T	P-T	P-T	P-T	P-T	P-T	P-T	P-T	P-T	P-T	P-T	P-T	P	P	P
Electricity:																
Theory	T	T	T	T	T	T	T	T	T	T	T	T	T	T	T	T
General Maintenance	P-T	P-T	P-T	P-T	P-T	P-T	P-T	P-T	P-T	P-T	P-T	P-T	P-T	P-T	P	P
Generators	P-T	P-T	P-T	P-T	P-T	P-T	P-T	P-T	P-T	P-T	P-T	P-T	P-T	P-T	P	P
Motors	P-T	P-T	P-T	P-T	P-T	P-T	P-T	P-T	P-T	P-T	P-T	P-T	P-T	P-T	P	P
Motor Controllers	P-T	P-T	P-T	P-T	P-T	P-T	P-T	P-T	P-T	P-T	P-T	P-T	P-T	P-T	P	P
Propulsion Systems	P-T	P-T	P-T	P-T	P-T	P-T	P-T	P-T	P-T	P-T	P	P	P-T	P-T	P	P
Distribution Systems	P-T	P-T	P-T	P-T	P-T	P-T	P-T	P-T	P-T	P-T	P-T	P-T	P-T	P-T	P	P
Electronic Systems	P-T	P-T	P-T	P-T	P-T	P-T	P-T	P-T	P-T	P-T	P	P	P	P	P	P
Batteries	P-T	P-T	P-T	P-T	P-T	P-T	P-T	P-T	P-T	P-T	P-T	P-T	P-T	P-T	P	P
Communications	P-T	P-T	P-T	P-T	P-T	P-T	P-T	P-T	P-T	P-T	P	P	P	P-T	P	P
Safety	P-T	P-T	P-T	P-T	P-T	P-T	P-T	P-T	P-T	P-T	P-T	P-T	P-T	P-T	P	P
Casualty Control	P-T	P-T	P-T	P-T	P-T	P-T	P-T	P-T	P-T	P-T	P-T	P-T	P-T	P-T	P	P
Steam Generators:																
Steam	P-T	P	P-T	P	P-T	P	P-T	P	P-T		P-T		P	P	P	
Main Boilers	P-T		P-T		P-T		P-T		P-T		P-T				P-T	
Auxiliary Boilers		P-T		P-T		P-T		P-T		P-T		P-T	P	P		P
Feedwater Systems	P-T	P-T	P-T	P-T	P-T	P-T	P-T	P-T	P-T		P-T		P	P	P-T	
Condensate Sustems	P-T	P-T	P-T	P	P-T	P	P-T	P	P-T		P-T				P-T	
Recovery Systems	P-T	P-T	P-T	P	P-T	P	P-T	P	P-T		P-T		P	P	P-T	
Fuel	P-T	P-T	P-T	P-T	P-T	P-T	P-T	P-T	P-T	P-T	P-T	P-T	P-T	P-T	P-T	P
Fuel Systems	P-T	P-T	P-T	P-T	P-T	P-T	P-T	P-T	P-T	P-T	P-T	P-T	P-T	P-T	P-T	P
Boiler Water	P-T	P-T	P-T	P-T	P-T	P-T	P-T	P-T	P-T	P	P-T	P	P	P	P-T	
Control Systems	P-T	P-T	P-T	P-T	P-T	P-T	P-T	P-T	P-T	P-T	P-T		P	P	P-T	
Automation Systems	P-T	P-T	P-T	P-T	P-T	P-T	P-T	P-T	P-T	P-T	P-T		P	P	P-T	
Safety	P-T	P-T	P-T	P-T	P-T	P-T	P-T	P-T	P-T	P-T	P-T	P	P	P	P-T	P
Casualty Control	P-T	P-T	P-T	P-T	P-T	P-T	P-T	P-T	P-T	P-T	P-T	P	P	P	P-T	P
Steam Engines:																
Main Turbine	P-T		P-T		P-T		P-T		P-T		P-T				P-T	
Auxiliary Turbine	P-T	P	P-T	P	P-T	P	P-T	P	P-T		P-T				P-T	
Reciprocating Machines	P-T		P-T		P-T		P-T		P-T		P-T				P-T	
Governor Systems	P-T	P	P-T	P	P-T	P	P-T	P	P-T		P-T				P-T	
Control Systems	P-T	P	P-T	P	P-T	P	P-T	P	P-T		P-T				P-T	
Automation Systems	P-T		P-T		P-T		P-T		P-T		P-T				P-T	
Lubrication Systems	P-T	P	P-T	P	P-T	P	P-T	P	P-T		P-T				P-T	
Drive Systems	P-T		P-T		P-T		P-T		P-T		P-T				P-T	
Safety	P-T	P	P-T	P	P-T	P	P-T	P	P-T		P-T				P-T	
Casualty Control	P-T	P	P-T	P	P-T	P	P-T	P	P-T		P-T				P-T	
Motor:																
Main Engines		P-T		P-T		P-T		P-T		P-T		P-T	P-T	P-T		P-T
Auxiliary Engines	P-T	P-T	P-T	P-T	P-T	P-T	P-T	P-T	P-T	P-T	P-T	P-T	P-T	P-T	P	P-T
Starting Systems	P	P-T	P	P-T	P	P-T	P	P-T	P	P-T	P	P-T	P-T	P-T		P-T
Lubrication Systems	P-T	P-T	P-T	P-T	P-T	P-T	P-T	P-T	P-T	P-T	P-T	P-T	P-T	P-T	P-T	P-T
Fuel	P-T	P-T	P-T	P-T	P-T	P-T	P-T	P-T	P-T	P-T	P-T	P-T	P-T	P-T	P-T	P-T
Fuel Systems	P-T	P-T	P-T	P-T	P-T	P-T	P-T	P-T	P-T	P-T	P-T	P-T	P-T	P-T	P-T	P-T
Combustion Systems	P-T	P-T	P-T	P-T	P-T	P-T	P-T	P-T	P	P-T	P	P-T	P-T	P-T		P-T
Intake Systems	P	P-T	P	P-T	P	P-T	P	P-T	P	P-T	P	P-T	P-T	P-T		P-T
Exhaust Systems	P	P-T	P	P-T	P	P-T	P	P-T	P	P-T	P	P-T	P-T	P-T		P-T
Cooling Systems	P	P-T	P	P-T	P	P-T	P	P-T	P	P-T	P	P-T	P-T	P-T		P-T
Supercharging Systems	P	P-T	P	P-T	P	P-T	P	P-T	P	P-T	P	P-T	P-T	P-T		P-T
Drive Systems	P	P-T	P	P-T	P	P-T	P	P-T		P-T		P-T	P-T	P-T		P-T
Control Systems	P	P-T	P	P-T	P	P-T	P	P-T	P	P-T	P	P-T	P-T	P-T		P-T

TABLE 10.950.—SUBJECTS FOR ENGINEER LICENSES—Continued

	Unlimited chief engineer		Unlimited 1st asst. engineer		Unlimited 2nd asst. engineer		Unlimited 3rd asst. engineer		Chief engineer limited		A/E Ltd & DDE unlim.		Unin. ind. C/E	Fish. vsl. A/E	DDE Ltd HP	
	STM	MTR	STM	MTR	STM	MTR	STM	MTR	STM	MTR	STM	MTR	MTR	MTR	STM	MTR
Automation Systems	P	P-T	P	P-T	P	P-T	P	P-T	P	P-T	P	P-T	P-T	P-T		P-T
Governors	P	P-T	P	P-T	P	P-T	P	P-T	P	P-T	P	P-T	P-T	P-T		P-T
Turbines	P	P-T	P	P-T	P	P-T	P	P-T	P	P-T	P	P-T	P-T	P-T		P-T
Safety	P-T	P-T	P-T	P-T	P-T	P-T	P-T	P-T	P-T	P-T	P-T	P-T	P-T	P-T	P-T	P-T
Casualty Control	P-T	P-T	P-T	P-T	P-T	P-T	P-T	P-T	P-T	P-T	P-T	P-T	P-T	P-T	P-T	P-T
Safety:																
Fire	P-T	P-T	P-T	P-T	P-T	P-T	P-T	P-T	P-T	P-T	P-T	P-T	P-T	P-T	P-T	P-T
Fire Prevention	P-T	P-T	P-T	P-T	P-T	P-T	P-T	P-T	P-T	P-T	P-T	P-T	P-T	P-T	P-T	P-T
Fire Fighting	P-T	P-T	P-T	P-T	P-T	P-T	P-T	P-T	P-T	P-T	P-T	P-T	P-T	P-T	P-T	P-T
Flooding	P-T	P-T	P-T	P-T	P-T	P-T	P-T	P-T	P-T	P-T	P-T	P-T	P-T	P-T	P	P
Dewatering	P-T	P-T	P-T	P-T	P-T	P-T	P-T	P-T	P-T	P-T	P-T	P-T	P-T	P-T	P	P
Stability and Trim	P-T	P-T	P-T	P-T	P-T	P-T	P-T	P-T	P-T	P-T	P-T	P-T	P-T	P-T	P	P
Damage Control	P-T	P-T	P-T	P-T	P-T	P-T	P-T	P-T	P-T	P-T	P-T	P-T	P-T	P-T	P	P
Emergency Equipment and Lifesaving Appliances.	P-T	P-T	P-T	P-T	P-T	P-T	P-T	P-T	P-T	P-T	P-T	P-T	P-T	P-T	P	P
General Safety	P-T	P-T	P-T	P-T	P-T	P-T	P-T	P-T	P-T	P-T	P-T	P-T	P-T	P-T	P	P
First Aid	P-T	P-T	P-T	P-T	P-T	P-T	P-T	P-T	P-T	P-T	P-T	P-T	P-T	P-T	P	P
Dangerous Materials	P-T	P-T	P-T	P-T	P-T	P-T	P-T	P-T	P-T	P-T	P-T	P-T	P-T	P-T	P	P
Pollution	P-T	P-T	P-T	P-T	P-T	P-T	P-T	P-T	P-T	P-T	P-T	P-T	P-T	P-T	P	P
Inspections and Surveys	P-T	P-T	P-T	P-T	P-T	P-T	P-T	P-T	P-T	P-T	P-T	P-T	P-T	P-T	P	P
U.S. Rules and Regulations	P-T	P-T	P-T	P-T	P-T	P-T	P-T	P-T	P-T	P-T	P-T	P-T	P-T	P-T	P	P
International Rules and Regulations	P-T	P-T	P-T	P-T	P-T	P-T	P-T	P-T	P-T	P-T	P-T	P-T	P-T	P-T	P	P

P=Practical Knowledge.
T=Theoretical Knowledge.

PART 12—CERTIFICATION OF SEAMEN

62. The authority citation for Part 12 continues to read as follows:

Authority: 46 U.S.C. 7301, 7701, 8105, 10104; 49 CFR 1.46.

63. Section 12.20–1 is amended by revising paragraph (c) to read as follows:

§ 12.20–1 General requirements.

* * * * *

(c) A currently valid license as master or mate of inspected, mechanically propelled vessels of more than 200 gross tons, pilot of inspected, mechanically propelled vessels, or engineer authorizes the holder to serve as tankerman upon inspected vessels of the United States required to have a certificated tankerman without having a separate certificate as tankerman.

* * * * *

PART 15—MANNING REQUIREMENTS

64. The authority citation for Part 15 is revised to read as follows:

Authority: 46 U.S.C. 2103, 3703, 8105; 49 CFR 1.45, 1.46.

65. In the table of contents for Part 15, the heading of § 15.901 is revised to read as follows:

§ 15.901 Inspected vessels of less than 100 gross tons.

66. Section 15.301(a) is amended by adding the definition of "self-propelled" in alphabetical order to read as follows:

§ 15.301 Definition of terms used in this part.

* * * * *

"Self-Propelled" has the same meaning as the terms "propelled by machinery" and "mechanically propelled." This term would also include vessels fitted with both sails and mechanical propulsion.

* * * * *

67. Section 15.401 is revised to read as follows:

§ 15.401 Employment and service within restrictions of license or document.

A person may not employ or engage an individual, and an individual may not serve, in a position in which an individual is required by law or regulation to hold a license, certificate of registry, or merchant mariner's document, unless the individual holds a valid license, certificate of registry, or merchant mariner's document, as appropriate, authorizing service in the capacity in which the individual is engaged or employed and the individual serves within any restrictions placed on the license, certificate of registry, or merchant mariner's document.

68. Section 15.501 is amended by revising paragraph (b) to read as follows:

§ 15.501 Certificate of Inspection.

* * * * *

(b) The manning requirements for a particular vessel are determined by the OCMI after consideration of the applicable laws, the regulations in this part, and all other factors involved, such as: Emergency situations, size and type of vessel, installed equipment, proposed routes of operation including frequency of port calls, cargo carried, type of service in which employed, degree of automation, use of labor saving devices, and the organizational structure of the vessel.

69. Section 15.801 is revised to read as follows:

§ 15.801 General.

The OCMI will determine the specific manning levels for vessels required to have certificates of inspection by Part B of Subtitle II of Title 46 U.S. Code. The masters or individuals in command of all vessels, whether required to be inspected under 46 U.S.C. 3301 or not, are responsible for properly manning vessels in accordance with the applicable laws, regulations, and international conventions.

70. Section 15.805 is amended by adding a new paragraph (a)(4) to read as follows:

§ 15.805 Master.

(a) * * *

(4) Every inspected small passenger vessel.

* * * * *

71. Section 15.810 is amended by redesignating paragraphs (a) through (d) as paragraphs (b) through (e), respectively, by adding a new paragraph (a), and by revising the introductory text of newly designated paragraph (b) and

revising paragraph (d) to read as follows:

§ 15.810 Mates.

(a) The OCMI determines the minimum number of licensed mates required for the safe operation of inspected vessels.

(b) The minimum number of licensed mates required to be carried on every inspected, self-propelled, seagoing and Great Lakes vessel, and every inspected, seagoing, passenger vessel must not be less than the following, except when reductions are authorized under paragraph (e) of this section:

* * * * *

(d) The OCMI may increase the minimum number of mates indicated in paragraph (b) of this section where he or she determines that the vessel's characteristics, route, or other operating conditions create special circumstances warranting an increase.

* * * * *

72. Section 15.901 is revised to read as follows:

§ 15.901 Inspected vessels of less than 100 gross tons.

(a) An individual holding a license as mate or pilot of inspected, self-propelled vessels of over 200 gross tons is authorized to serve as master on inspected vessels of less than 100 gross tons within any restrictions on the individual's license.

(b) An individual holding a license authorizing service as master or mate of inspected, self-propelled vessels is authorized to serve as master or mate, respectively, of non-self-propelled vessels other than sail vessels, within any restrictions on the individual's license.

(c) An individual holding a license authorizing service as master or mate of inspected, sail vessels is authorized to serve as master or mate, respectively, of other non-self-propelled vessels, within any restrictions on the individual's license.

(d) An individual holding a license authorizing service as master or mate of inspected, auxiliary sail vessels, is authorized to serve as master or mate, respectively, of self-propelled and non-self-propelled vessels, within any restrictions on the individual's license.

73. Section 15.905 is revised to read as follows:

§ 15.905 Uninspected passenger vessels.

(a) An individual holding a license as master or pilot of inspected, self-propelled vessels is authorized to serve as operator of uninspected passenger vessels within any restrictions, other than gross tonnage limitations, on the individual's license.

(b) An individual holding a license as mate of inspected, self-propelled vessels, other than Great Lakes, inland, or river vessels of not more than 200 gross tons, is authorized to serve as operator of uninspected passenger vessels, within any restrictions, other than gross tonnage limitations, on the individual's license.

74. Section 15.910 is amended by revising paragraphs (a) and (b) to read as follows:

§ 15.910 Uninspected towing vessels.

(a) An individual of 21 years or more of age holding a license as master of inspected, self-propelled vessels, or a license as mate or pilot of inspected, self-propelled vessels of more than 200 gross tons, is authorized to serve as operator of uninspected towing vessels within any restrictions on the indivdual's license. A licensed mate or pilot authorized by this section to serve as operator of uninspected towing vessels may only be in command of the vessel on domestic routes.

(b) Whenever an uninspected towing vessel is under the direction and control of a person holding a license for service only as second-class operator of uninspected towing vessels, a person holding a license authorizing service as operator of uninspected towing vessels must be on board as a member of the crew.

* * * * *

75. Section 15.915 is revised to read as follows:

§ 15.915 Engineer licenses.

The following licenses authorize the holder to serve as noted, within any restrictions on the license:

(a) A designated duty engineer license authorizes service as chief or assistant engineer on vessels of not more than 500 gross tons in the following manner:

(1) A designated duty engineer limited to vessels of not more than 1000 horsepower or 4000 horsepower may serve only on near coastal, Great Lakes, or inland waters;

(2) A designated duty engineer with no horsepower limitations may serve on any waters.

(b) A chief engineer (limited-oceans) license authorizes service as chief or assistant engineer on vessels of any gross tons on inland waters and of not more than 1600 gross tons on ocean, near coastal, or Great Lakes waters.

(c) A chief engineer (limited-near coastal) license authorizes service as chief or assistant engineer on vessels of any gross tons on inland waters and of not more than 1600 gross tons on near coastal or Great Lakes waters.

(d) An assistant engineer (limited-oceans) license authorizes service on vessels of any gross tons on inland waters and of not more than 1600 gross tons on ocean, near coastal, or Great Lakes waters.

SUBCHAPTER D—TANK VESSELS

PART 30—GENERAL PROVISIONS

76. The authority citation for Part 30 continues to read as follows:

Authority: 46 U.S.C. 3306, 3703; 49 U.S.C. 1804; 49 CFR 1.45, 1.46; § 30.01–2 also issued under the authority of 46 U.S.C. 3507.

77. Section 30.10–71 is revised to read as follows:

§ 30.10–71 Tankerman—TB/ALL.

The term "tankerman" means any person holding a certificate issued by the Coast Guard attesting to his or her competency in the handling of flammable or combustible liquid cargo in bulk or is any person holding a valid license as master or mate of inspected, mechanically propelled vessels of more than 200 gross tons, pilot of inspected, mechanically propelled vessels, or engineer.

PART 31—INSPECTION AND CERTIFICATION

78. The authority citation for Part 31 continues to read as follows:

Authority: 33 U.S.C. 1321(j); 46 U.S.C. 3306, 3703, 5115, 8105; 49 U.S.C. App. 1804; E.O. 12234, 45 FR 58801, 3 CFR, 1980 Comp., p. 277; E.O. 11735, 38 FR 21243, 3 CFR, 1971–1975 Comp., p. 793; 49 CFR 1.46.

79. Section 31.15–1 is amended by revising paragraph (b) to read as follows:

§ 31.15–1 Licensed officers and crews—TB/ALL.

* * * * *

(b) In all cases where a certificate of inspection does not require at least two licensed individuals authorized to serve as tankerman by § 30.10–71 of this Subchapter, the Officer in Charge, Marine Inspection, shall enter in the certificate of inspection issued to any manned tank vessel subject to the regulations in this Subchapter the number of the crew required to be certificated as tankermen. If the total complement of a tank vessel is either one or two persons, only one such person need be a certificated tankermen. If the total complement exceeds two, only two such persons need be certificated tankermen.

80. Section 31.15–5 is revised to read as follows:

§ 31.15–5 Tank barges—B/ALL.

Tank barges subject to the provisions of this subchapter need not be manned unless, in the judgment of the Officer in Charge, Marine Inspection, such manning is necessary for the protection of life and property and for the safe operation of the vessel.

81. The authority citation for Part 35 continues to read as follows:

Authority: 33 U.S.C. 1321(j); 46 U.S.C. 3306, 3703, 6101; 49 U.S.C. App. 1804; E.O. 11735, 38 FR 21243, 3 CFR, 1971–1975 Comp., p. 793; E.O. 12234, 45 FR 58801, 3 CFR, 1980 Comp., p. 277; 49 CFR 1.46.

PART 35—OPERATIONS

82. Section 35.35–1 is amended by revising paragraph (b) to read as follows:

§ 35.35–1 Men on duty—TB/ALL.

* * * * *

(b) In the case of unmanned barges, the owners, masters or persons in charage of such barges shall insure that a person holding a valid license as master or mate of inspected, mechanically propelled vessels of more than 200 gross tons; pilot of inspected, mechanically propelled vessels; or engineer, or a certificated tankerman is on duty to perform transfer operations, which licensed person or certificated tankerman shall be considered as the person in charge of the unmanned tank barge.

* * * * *

SUBCHAPTER O—CERTAIN BULK DANGEROUS CARGOES

PART 151—BARGES CARRYING BULK LIQUID HAZARDOUS MATERIAL CARGOES

83. The authority citation for Part 151 continues to read as follows:

Authority: 33 U.S.C. 1903; 46 U.S.C. 3703; 46 CFR 1.46.

84. Section 151.03–53 is revised to read as follows:

§ 151.03–53 Tankerman.

A tankerman is a person holding a certificate issued by the Coast Guard attesting to his or her competency in handling flammable or combustible liquid cargo in bulk or any person holding a valid license as master or mate of inspected, mechanically propelled vessels of more than 200 gross tons; pilot of inspected, mechanically propelled vessels; or engineer.

85. Section 151.45–4 is amended by revising paragraph (a)(1) to read as follows:

§ 151.45–4 Cargo handling.

(a) * * *

(1) When the product to be transferred has flammable or combustible characteristics as defined in this chapter, the shipper and the owners, charterer, agent, masters, or persons in charge of such barges shall insure that a person holding a valid license as master or mate of inspected, mechanically propelled vessels of more than 200 gross tons; pilot of inspected, mechanically propelled vessels; or engineer, or a certificated tankerman is on duty to perform transfer operations. This person is considered as the person in charge of the unmanned tank barge. In addition, the Officer in Charge, Marine Inspection, shall be furnished satisfactory, documentary evidence that this person is trained in, and capable of performing competently, the necessary operation which relates to the transfer of the specific cargo.

* * * * *

SUBCHAPTER T—SMALL PASSENGER VESSELS (UNDER 100 GROSS TONS)

PART 185—OPERATIONS

86. The authority citation for Part 185 continues to read as follows:

Authority: 46 U.S.C. 3306, 6101, 8105; 49 CFR 1.46.

87. Section 185.25–20 is amended by revising paragraph (b) to read as follows:

§ 185.25–20 Test of emergency position indicating radio beacon (EPIRB).

* * * * *

(b) The EPIRB's battery is replaced after the EPIRB is used and before the date required by FCC regulations in 47 CFR Part 80.

TITLE 33—NAVIGATION AND NAVIGABLE WATERS

SUBCHAPTER O—POLLUTION

PART 155—OIL POLLUTION PREVENTION REGULATIONS FOR VESSELS

Subpart C—Oil Transfer Personnel, Procedures, Equipment, and Records

88. The authority citation for Part 155 continues to read as follows:

Authority: 33 U.S.C. 1321(j)(1)(C), 1902(c) and 1903(b); E.O. 11735; 49 CFR 1.46(m), unless otherwise noted.

89. Section 155.710 is amended by revising paragraphs (a)(1) and (a)(2) to read as follows:

§ 155.710 Qualifications of person in charge.

(a) * * *

(1) For oil transfer operations on self-propelled tank vessels, that individual holds a valid license as master or mate on inspected, mechanically propelled vessels of more than 200 gross tons; pilot of inspected, mechanically propelled vessels; or engineer, except that the person in charge of tank cleaning operations may be a tankerman certificated for the grade of cargo last carried; or,

(2) For tank barges, the individual holds a valid license as master or mate on inspected, mechanically propelled vessels of more than 200 gross tons; pilot of inspected, mechanically propelled vessels; or engineer, or is a tankerman certificated for the grade of cargo carried; or,

* * * * *

Date: December 16, 1988.

Clyde T. Lusk, Jr.,

Vice Admiral, U.S. Coast Guard Acting Commandant.

[FR Doc. 89–3 Filed 1–3–89; 8:45 am]

BILLING CODE 4910–14–M

FEDERAL COMMUNICATIONS COMMISSION

47 CFR Parts 0 and 64

[Gen. Docket 87–505; DA 88–1850]

National Security Emergency Preparedness Telecommunications Service Priority System

AGENCY: Federal Communications Commission.

ACTION: Final rule; correction.

SUMMARY: The following corrections are made in the Federal Communications Commission's (FCC's) preamble and appendix to its rules relating to the National Security Emergency Preparedness (NSEP) Telecommunications Service Priority (TSP) System. The rules were published in the Federal Register on November 23, 1988 [53 FR 47535].

FOR FURTHER INFORMATION CONTACT: Jim Ferris at (202) 634–1830.

SUPPLEMENTARY INFORMATION: The FCC promulgated rules and regulations which replaced its existing Restoration Priority procedures with a new NSEP TSP System having broader scope and applicability. The revisions thereby updated Part 64 of FCC rules governing priority treatment of provisioning and restoration of common carrier-provided telecommunications services during

emergencies. Conforming amendments were made to certain delegated authorities contained in Part 0 of FCC rules.

* * * * *

The following corrections are made in Gen. Docket 87-505; FCC 88-341, containing the amended FCC rules which replaced the Restoration Priority System with a new NSEP TSP System which modernizes the means by which the nation is assured that essential communications services provided by common carriers receive priority provisioning and restoration. The amended rules were published in the Federal Register on November 23, 1988 [53 FR 47535].

1. Page 53 FR 47535:

1st and 3rd columns: change the effective date from December 23, to December 27, 1988.

2. Page 53 FR 47536:

1st column, 26th line, change "System" to "Service" so that the line reads: Telecommunications Service Priority

3. Page 53 FR 47537:

1st column, 26th line, delete the end of quote in the first word services," so that the line reads: services, or "NSEP services," means

3rd column, 10th line, change "and" to "or" so that the line reads: (a) Interstate or foreign

3rd column, 25th and 26th lines, delete the phrase "and components of services" so that the 25th and 26th lines read: restoration of services that the selected vendor is able to

3rd column, 40th line, change "a" to "that" so that the line reads: owned by that service vendor. Such control

4. Page 53 FR 47539:

1st column, 50th line, add the word "requests" so that the line reads: (b) Comply with NSEP service requests by:

1st column, 65th line, delete the phrase "switched (e.g., cellular)" so that the remaining line reads: (2) Restore NSEP

2nd column, 2nd line, delete the designation "E" so that the line reads: priority level assignment (i.e., "1", "2",

3rd column, 9th line from end, add "or restoring" so that the line reads: provisioning or restoring NSEP services.

5. Page 53 FR 47541

2nd column, 43rd line, change first full sentence of para. 12.c.(2) to read: This subcategory covers those minimum additional telecommunication services essential to maintaining an optimum defense, diplomatic, or continuity-of-government posture before, during, and after crises situations.

* * * * *

Federal Communications Commission.

Donna R. Searcy,

Secretary.

[FR Doc. 89-52 Filed 1-3-89; 8:45 am]

BILLING CODE 6712-01-M

---

47 CFR Part 73

[MM Docket No. 88-254; RM-6219]

Radio Broadcasting Services; La Monte, MO

AGENCY: Federal Communications Commission.

ACTION: Final rule.

SUMMARY: This action allots Channel 246A to La Monte, Missouri, as that community's first FM broadcast service, in response to a petition filed by Johnson County Broadcasters, Inc. Petitioner filed supporting comments. The coordinates for Channel 246A at La Monte are 38-45-36 and 93-20-30 which includes a site restriction 7.4 kilometers east of the community. With this action, this proceeding is terminated.

DATES: Effective February 13, 1989. The window period for filing applications will open on February 14, 1989, and close on March 16, 1989.

FOR FURTHER INFORMATION CONTACT: Kathleen Scheuerle, Mass Media Bureau, (202) 634-6530.

SUPPLEMENTARY INFORMATION: This is a summary of the Commission's Report and Order, MM Docket No. 88-254, adopted November 18, 1988, and released December 28, 1988. The full text of this Commission decision is available for inspection and copying during normal business hours in the FCC Dockets Branch (Room 230), 1919 M Street, NW., Washington, DC. The complete text of this decision may also be purchased from the Commission's copy contractors, International Transcription Service, (202) 857-3800, 2100 M Street, NW., Suite 140, Washington, DC 20037.

List of Subjects in 47 CFR Part 73

Radio broadcasting.

PART 73—[AMENDED]

1. The authority citation for Part 73 continues to read as follows:

Authority: 47 U.S.C. 154, 303.

§ 73.202 [Amended]

2. Section 73.202(b), the Table of FM allotments under Missouri is amended by adding La Monte, Channel 246A.

Federal Communications Commission.

Steve Kaminer,

Deputy Chief, Policy and Rules Division, Mass Media Bureau.

[FR Doc. 89-54 Filed 1-3-89; 8:45 am]

BILLING CODE 6712-01-M

---

47 CFR Part 73

[MM Docket No. 88-78; RM-6185]

Radio Broadcasting Services; Leland, North Carolina

AGENCY: Federal Communications Commission.

ACTION: Final rule.

SUMMARY: The Commission, at the request of Leland Broadcasting Group, allots Channel 231A to Leland, North Carolina, as the community's first local FM service. Channel 231A can be allotted to Leland in compliance with the Commission's minimum distance separation requirements with a site restriction of 8.6 kilometers (5.3 miles) southwest to avoid a short-spacing to unoccupied and unapplied for Channel 229A at Wrightsville Beach, North Carolina, and to Station WZBK, Channel 232A, Wallace, North Carolina. The coordinates for this allotment are North Latitude 34-11-09 and West Longitude 78-05-13. With this action, this proceeding is terminated.

DATES: Effective February 13, 1989. The window period for filing applications will open on February 14, 1989; and close on March 16, 1989.

FOR FURTHER INFORMATION CONTACT: Leslie K. Shapiro, Mass Media Bureau, (202) 634-6530.

SUPPLEMENTARY INFORMATION: This is a summary of the Commission's Report and Order, MM Docket No. 88-78, adopted November 16, 1988, and released December 28, 1988. The full text of this Commission decision is available for inspection and copying during normal business hours in the FCC Dockets Branch (Room 230), 1919 M Street, NW., Washington, D.C. The complete text of this decision may also be purchased from the Commission's copy contractor, International Transcription Service, (202) 857-3800, 2100 M Street, NW, Suite 140, Washington, DC 20037.

List of Subjects in 47 CFR Part 73

Radio broadcasting.

PART 73—[AMENDED]

1. The authority citation for Part 73 continues to read as follows:

Authority: 47 U.S.C. 154, 303.