have the cost of its full monthly coupon allotment deducted from any grant or payment such household may be entitled to receive under Title IV of the Social Security Act, and have its full monthly coupon allotment distributed to it.

* * * * *

(78 Stat. 703, as amended; 7 U.S.C. 2011–2026)

Effective date. This amendment shall become effective January 1, 1976.

(Catalog of Federal Domestic Assistance Programs No. 10.551, National Archives Reference Services)

Dated: February 18, 1976.

RICHARD L. FELTNER,
Assistant Secretary.

[FR Doc.76–5087 Filed 2–23–76;8:45 am]

Title 9—Animals and Animal Products

CHAPTER I—ANIMAL AND PLANT HEALTH INSPECTION SERVICE, DEPARTMENT OF AGRICULTURE

PART 73—SCABIES IN CATTLE

Area Quarantined

This amendment quarantines a portion of Lincoln County in Nebraska because of the existence of cattle scabies. The restrictions pertaining to the interstate movement of cattle from quarantined areas as contained in 9 CFR Part 73, as amended, will apply to the area quarantined.

Accordingly, Part 73, Title 9, Code of Federal Regulations, as amended, restricting the interstate movement of cattle because of scabies is hereby amended as follows:

In § 73.1a, a new paragraph (b) relating to the State of Nebraska is added to read:

§ 73.1a Notice of quarantine.

* * * * *

(b) Notice is hereby given that cattle in certain portions of the State of Nebraska are affected with scabies, a contagious, infectious, and communicable disease; and, therefore, the following area in such State is hereby quarantined because of said disease:

That portion of Lincoln County comprised of all of sections 17 and 18 and those portions of sections 7 and 8 south of the North Platt River, R. 31 W., T. 14 N. in Hinman Precinct.

(Sec. 4–7, 23 Stat. 32, as amended; secs. 1 and 2, 32 Stat. 791–792, as amended; secs. 1–4, 33 Stat. 1264, 1265, as amended; secs. 3 and 11, 76 Stat. 130, 132; (21 U.S.C. 111–113, 115, 117, 120, 121, 123–126, 134b, 134f); 37 FR 28464, 28477; 38 FR 19141.)

Effective date. The foregoing amendment shall become effective February 19, 1976.

The amendment imposes certain further restrictions necessary to prevent the interstate spread of cattle scabies and must be made effective immediately to accomplish its purpose in the public interest. It does not appear that public participation in this rulemaking proceeding would make additional relevant information available to the Department.

Accordingly, under the administrative procedure provisions in 5 U.S.C. 553, it is found upon good cause that notice and other public procedure with respect to the amendment are impracticable and contrary to the public interest, and good cause is found for making it effective less than 30 days after publication in the FEDERAL REGISTER.

Done at Washington, D.C., this 19th day of February 1976.

J. M. HEJL,
Deputy Administrator,
Veterinary Services.

[FR Doc.76–5257 Filed 2–23–76;8:45 am]

Title 14—Aeronautics and Space

CHAPTER II—CIVIL AERONAUTICS BOARD

SUBCHAPTER A—ECONOMIC REGULATIONS

[Reg. ER–945, Amdt. 1]

PART 244—UNIFORM SYSTEM OF ACCOUNTS AND REPORTS FOR AIR FREIGHT FORWARDERS AND INTERNATIONAL AIR FREIGHT FORWARDERS; FILING OF REPORTS BY FOREIGN AIR FREIGHT FORWARDERS AND COOPERATIVE SHIPPERS ASSOCIATIONS

Reporting Requirements

Adopted by the Civil Aeronautics Board at its office in Washington, D.C., February 18, 1976.

By ER–887, adopted September 16, 1974, the Civil Aeronautics Board reissued Part 244 of its Economic Regulations applicable to air freight forwarders. The reissued Part 244 required air freight forwarders and international air freight forwarders who have in excess of $3 million in calendar year air freight forwarding revenues to establish and maintain a uniform system of accounts. In addition, it made substantial changes in the report forms, the related reporting instructions and the filing requirements applicable to all forwarders. Both the uniform system of accounts and the revised reporting requirements have been in effect since January 1, 1975, and, with the receipt of the first report, the Board's staff has conducted an extensive review of the reports filed as well as a review of the continuing need for certain new schedules which had been introduced.

As a result of these reviews, it has been concluded that the accounting and reporting requirements should be reduced for all forwarders, especially the smaller forwarders. Further, it has been decided that a reduction in the accounting and reporting requirements applicable to forwarders would best be achieved by: (1) Raising the revenue requirement for adopting the uniform system of accounts; (2) eliminating certain schedules which were introduced in ER–887 and making perfecting changes to others; (3) establishing three levels of reporting requirements scaled to the revenue operations of the forwarders; and (4) reducing the filing frequency for CAB Form 244 reports from quarterly to annually.[1]

THE UNIFORM SYSTEM OF ACCOUNTS

A review of the distribution of industry revenues indicates that by increasing from $3 million to $10 million the requirement to maintain a uniform system of accounts, we could substantially reduce the existing burden imposed on some forwarders while still insuring that a high percentage of the industry's financial data would be accounted for on a uniform basis.[2]

This amendment will raise the $3 million air freight forwarding revenue criterion to $10 million. Air freight forwarders below the $10 million level will not be required to adopt the uniform system of accounts until they have crossed that revenue frontier. Those forwarders who have revenues below $10 million and have already adopted the uniform system of accounts as a result of the $3 million criterion will be permitted the option of retaining it or using some other system of accounts until such time as their revenues exceed $10 million.

ELIMINATION OF SCHEDULES

In the process of reducing the reporting burden, this amendment will eliminate seven schedules (five financial and two statistical) from the CAB Form 244 report. Five of these schedules had been applicable to air freight forwarders who were subject to the uniform system of accounts. Two others were filed by all air freight forwarders.

Included among the five financial schedules being eliminated are: Schedule B–3, "Accounts Receivable and Payable Aging and Allowance for Doubtful Accounts"; Schedule B–4, "Accounts with Associated Companies"; Schedule B–5, "Property and Equipment"; Schedule I, "Insurance Coverage"; [3] and Schedule P–3, "Schedule of Specific Expense Accounts." This amendment will eliminate Schedule T–2b, "Destination Station Report" and combine statistical Schedules T–3a, "City-Pair Traffic Flow Report-Domestic" and T–3b, "City-Pair Traffic Flow Report-International" on a single form.

This amendment will also eliminate, through revision of the reporting instructions and modifications to the report forms, the present requirement to file a separate Schedule P–1, "Income Statement," and a separate Schedule T–2a, "Origin Station Report," for international and domestic operations, respectively. The forwarders holding domestic and international operating authority will instead file a single schedule

[1] The reduction of the filing frequency will not apply to Schedules T–4, T–5, and T–6 which are at issue in the Long-Haul Motor/Railroad Carrier Air Freight Forwarder Authority Case, Docket 26907.

[2] The proportionate share of industry revenues generated by forwarders whose annual air freight forwarding revenues exceed $10 million in calendar year revenues is approximately 81 percent.

P-1 which will have separate columns for each entity on the same form. With respect to schedule T-2a, carriers will report their top 20 origin stations without distinction between international and domestic. As will be noted in the amendment itself, other perfecting changes have been made to the statistical report forms which were previously included in the reporting, but not separately identified, such as joint loads and surface movements in lieu of air. In an editorial change, line 2030 on schedule P-1 and Section 6 of Part 244, in pertinent part, have been amended to read "IATA Agent Commissions" rather than "IATA Agent Revenues." These perfecting changes will not result in any additional burden.

Under Part 244 prior to this amendment, foreign forwarders were required to file only three statistical schedules on the same forms used by U.S. forwarders. So as to continue this procedure and avoid the establishment of a separate set of schedules for foreign forwarders, the reporting instructions of Section 9 of Part 244 have been amended to correspond with the amended requirements for U.S. forwarders and foreign forwarders also will not be required to file Schedule T-2b, "Destination Station Report."

ESTABLISHMENT OF THREE REPORTING LEVELS

As previously stated, this amendment establishes three levels of reporting requirements scaled to the magnitude of air freight forwarding revenues. This is designed to achieve a more appropriate relationship between forwarder size and reporting requirements.

A. Level 1 reporting requirements will apply to those forwarders who are subject to the uniform system of accounts after raising the criterion for adoption to $10 million. These forwarders will continue to report the same level of detail in balance sheets and income statements as now reported by forwarders subject to the uniform system of accounts using the superseded $3 million criterion. Nevertheless, these carriers will experience a significant overall reduction in reporting requirements under this amendment by virtue of the schedules being eliminated.

B. Level 2 forwarders will be comprised of forwarders who have calendar year air freight forwarding revenues of $100,000 or more, but who are not yet subject to the uniform system of accounts. The basic reporting distinction between Level 1 and Level 2 forwarders is that balance sheet and income statement data reported by this group of forwarders will be filed on a new Schedule B-1(A), "Summary Balance Sheet," and a new Schedule P-1(A), "Summary Income Statement," instead of being filed on the more detailed forms to be used by Level 1 forwarders.

All forwarders in Level 2 will be required to file Schedules B-2, "Notes to Balance Sheet" and Schedule P-2, "Notes to Income Statement." This will mean that some forwarders will be required to file this schedule for the first time since, under the reporting requirements which are amended by this rule, this requirement did not apply to forwarders having revenue below $3 million. However, the forms themselves are merely a vehicle which provides a place to report explanations of matters which have a material impact on the interpretation of the financial statements. Accordingly, any additional burden is expected to be minimal and more than offset by the reduction in balance sheet and income statement data to be reported.

C. Level 3 reporting requirements shall apply to those forwarders having annual air freight forwarding revenues below $100,000. Forwarders in this group will file only one schedule entitled Schedule A-1, "Certification and Single Form Report," which is comprised of four data elements which are essential to the Board's monitoring activities.[4] This represents a significant reduction in the number of reports filed by the smallest forwarders. Prior to the revision of this Part by this rule, these forwarders were required to file nine schedules with varying frequency during the reporting year.

REDUCTION IN THE FILING FREQUENCY

Since air freight forwarders are a significant force with respect to the volume of freight tendered to direct air carriers, the Board has the responsibility to monitor forwarder activities so that it may be in a position to take whatever action changing economic conditions dictate. To the extent that the following rule will modify Part 244, it reflects the Board's determination that it can adequately meet this responsibility by reviewing forwarder reports on an annual basis and by alleviating the accounting and reporting burdens imposed upon forwarders in the manner effected by this amendment.

Since this amendment reduces present reporting requirements, the Board finds that notice and public procedures hereon are not required.

In order to confer the maximum benefit from this amendment it shall be made effective January 1, 1976. Thus the reports covering the first calendar quarter of 1976, which would normally be due in the Board on May 17, 1976, will not be required to be filed and the first reports due under this Part as amended will be due in the Board on February 15, 1977.[5]

The Civil Aeronautics Board hereby amends Part 244 of the Economic Regulations (14 CFR Part 244), effective January 1, 1976, as follows:

1. Amend Section 1—Introduction to System of Accounts and Reports as follows:

A. By amending § 1-1 Applicability to read, in pertinent part, as follows:

§ 1-1 Applicability.

(a) Each air freight forwarder shall keep its books of accounts, records, and other memoranda in accordance with this system of accounts and reports if, during the calendar year ended December 31, 1974, or in any calendar year thereafter, its gross air freight forwarding revenues exceed $10 million.

(b) Any air freight forwarder whose air freight forwarding revenues did not exceed $10 million during the calendar year ended December 31, 1974, and does not exceed this limitation for any calendar year thereafter, will not be required to adopt the system of accounts prescribed herein, but will be subject to the reporting requirements specified in section 8.

* * * * *

B. By amending § 1-8 Conversion to this system of accounts and report to read, in pertinent part, as follows:

§ 1-8 Conversion to this system of accounts and reports.

* * * * *

(b) All air freight forwarders whose gross air freight forwarding revenues exceeded $10 million during the calendar year ended December 31, 1974, shall restate all balance sheet account balances as of the opening of business January 1, 1976, to conform with the provisions of this system of accounts.

(c) All air freight forwarders whose gross air freight forwarding revenues exceed $10 million during any calendar year after December 31, 1974, shall restate all balance sheet account balances as of the opening of business twelve months after the close of the calendar year in which gross air freight forwarding revenues exceeded $10 million dollars to conform to this system of accounts.

(d) Once this system of accounts and reports has been adopted by an air freight forwarder it shall not be abandoned in favor of any other system as long as the forwarder is authorized by the Civil Aeronautics Board to conduct air freight forwarding operations; except that, forwarders who adopted the system prior to January 1, 1976, and do not meet the prescribed revenue criterion set forth above, may at their option retain it or use some other system until their gross revenues exceed the $10 million criterion.

2. Amend Section 7—Specific Income and Expense Accounts to read, in pertinent part, as follows:

* * * * *

030—*IATA Agent Commissions.* Record here commissions derived from acting as an IATA Agent.

* * * * *

3. Amend Section 8 Reports as follows:

A. By changing the text from the section title to the conclusion of reporting

[3] All forwarders will still be required to file CAB Form 350, "Certificate of Insurance" in accordance with the provisions of Part 296 of the Economic Regulations.

[4] The requirement to file a single schedule will apply as a general rule. However, if the reporting forwarder is a long-haul motor or railroad carrier, or an affiliate of one, the forwarder will still be required to file schedules T-4, T-5, and T-6 in addition to schedule A-1.

[5] All air freight forwarders will still be required to file reports for the fourth quarter of 1975 as required under Sections 8 and 9 of Part 244 prior to this amendment. These reports will be due in the Board on February 17, 1976.

instruction for Schedule T–6 to read in pertinent part:

Section 8—Reports

(a) Each air freight forwarder shall file with the Civil Aeronautics Board an annual CAB Form 244 report entitled "Financial and Operating Report for Air Freight Forwarders and International Air Freight Forwarders" in accordance with the instructions of this Section.

(b) For reporting purposes all U.S. air freight forwarders shall be divided into three reporting levels: level 1, level 2, and level 3. The form and content of the annual report shall be different for each level.

(c) Level 1 shall apply to those air freight forwarders who have calendar year gross air freight forwarding revenues of $10 million or more; except that, for the reports covering the first calendar year after the $10 million criterion has been met for the first time, a forwarder may file as a level 2 forwarder.

(d) Level 2 shall apply to those forwarders who have calendar year gross air freight forwarding revenues which fall between $100,000 and $9,999,999; except that, for reports covering the first calendar year after the $100,000 minimum has been met for the first time, a forwarder may file as a level 3 forwarder.

(e) Level 3 shall apply to those forwarders who have gross air freight forwarding revenues below $100,000.

List of schedules

Schedule No.	Title	Applicability level— 1	2	3
A	Certification	×	×	
A–1	Certification and Single Form Report			×
B–1	Balance Sheet	×		
B–1(A)	Summary Balance Sheet		×	
B–2	Notes to Balance Sheet	×	×	
G	Corporate and Securities Data	×	×	
P–1	Income Statement	×		
P–1(A)	Summary Income Statement		×	
P–2	Notes to Income Statement	×	×	
T–1	Operating Statistics Schedule	×	×	
T–2a	Origin Station Report	×	×	
T–3	Traffic Flow Report	×	×	
T–4	Originating Air Station Data	(1)	(1)	(1)
T–5	Supplemental Operating Statistics	(1)	(1)	(1)
T–6	Analysis of Traffic by Weight Breaks	(1)	(1)	(1)

[1] These schedules have particular application to a limited group of forwarders—refer to reporting instructions for these schedules.

Section 8–1 General Instructions

(a) Blank copies of all of the schedules contained in this section will be supplied annually by the Civil Aeronautics Board.

(b) Each schedule contains a five-block carrier code and a four-block date code. The five-block carrier code is the same code currently in use for reports filed under Part 239 of the Board's Economic Regulations. The four-block data code will be used to record the year and the month, the first two blocks representing the year and the second two blocks representing the month of the calendar year. Thus, reports filed for the year ending December 31, 1976, will be entered as 7612. Both the carrier code and the date code shall be completed in the spaces provided on each form.

(c) Each schedule, in the lower left hand corner, contains a block for an original filing and a block for a revised filing. Indicate the nature of the filing by placing an "x" in the box next to the word Original or an "x" in the box next to the word Revision.

(d) (1) The CAB Form 244 report shall be due at the Civil Aeronautics Board on February 15 of each year.

(2) Schedules T–4, T–5, and T–6 shall be due at the Board on February 15, May 15, August 15, and November 15 of each year.

(3) If a due date falls on a Saturday, Sunday, or national holiday, the due date will change to the first following workday.

(e) If circumstances prevent the filing of the report on or before the prescribed due date, consideration will be given to the granting of an extension upon receipt of a written request therefor. To provide ample time for consideration and communication to the forwarder of the action taken, such a request must be delivered to the Board in writing at least three (3) days in advance of the due date, setting forth good and sufficient reason to justify the granting of an extension and the date when the report can be filed. Except in cases of emergency, no such request will be entertained which is not in writing and received by the Director, Bureau of Accounts and Statistics, at least three (3) days before the prescribed due date. If a request is denied, the air carrier remains subject to the filing requirements to the same extent as if no request for extension of time had been made.

Section 8–2 Specific Instructions

Schedule A—Certification. This certification shall be filed as a part of this report and shall be signed on the original copy by the chief accounting officer of the reporting forwarder, and it shall apply and be attached to each set of schedules required to be filed annually by Level 1 and Level 2 forwarders.

Schedule A–1—Certification and Single Form Report. (a) This certification and single form report shall be filed annually by all Level 3 forwarders.

(b) In the spaces provided, report the gross air freight forwarding revenues, gross air freight forwarding expenses, net income (loss) from forwarding operations and the tonnage of air freight tendered to air carriers as forwarders.

(c) The certification shall be signed on the original copy by the chief accounting officer of the reporting forwarder and shall apply to all data reported on the form.

Schedule B–1—Balance Sheet. (a) This schedule shall be filed annually by each Level 1 forwarder and shall reflect account balances at the close of business on the last day of the calendar year for the corporate or other business entity authorized to conduct air freight forwarder operations.

(b) Individual proprietors or partnerships shall report their equity in the caption Proprietary Equity and leave blank the caption Stockholder Equity.

(c) The balances shown on this schedule shall be in conformity with the description of accounts set forth in section 4 of this part.

Schedule B–1(A)—Summary Balance Sheet. (a) This schedule shall be filed annually by each Level 2 forwarder and shall summarize account balances at the close of business on the last day of the calendar year for the corporate or other business entity authorized to conduct air freight forwarder operations.

(b) On the line provided for current assets, report all resources which may reasonably be expected to be realized in cash or sold or consumed within one year. This classification shall include cash, temporary cash investments, receivables, materials and supplies, and short-term prepayments.

(c) On the line provided for investments and special funds, report long-term investments in securities of others which are not readily marketable, funds set aside for specific purposes or deposits, receivables or funds not available for current operations.

(d) On the line provided for property and equipment-net, report all investments in tangible property and equipment net of accumulated depreciation. Investments in land shall not be depreciated.

(e) On the line provided for intangible assets, report items which possess economic value but lack economic substance such as patents, trade marks, and rights and privileges acquired from other forwarders.

(f) On the line provided for deferred charges, report debit balances of a general clearing nature, including charges held in suspense pending receipt of information necessary for final disposition and prepayments chargeable to operations over a period of years.

(g) On the line provided for current liabilities, report all debts or obligations, the liquidation or payment of which is reasonably expected to require the use within one year of existing resources.

(h) On the line provided for noncurrent liabilities, report all debts or obligations, the liquidation or payment of

which is not reasonably expected to require the use within one year of existing resources.

(i) On the line provided for deferred credits, report all credit balances of a general clearing nature, including credits held in suspense pending receipt of further information necessary for final disposition.

(j) On the line provided for capital stock, report the par or stated value of capital stock. In the case of no par capital stock without stated value, the full consideration received.

(k) On the line provided for paid-in capital, report the difference between the price at which the capital stock is sold and the par or stated value of the stock.

(l) On the line provided for retained earnings, report the net income or loss from all operations of the corporate entity less dividends.

(m) On the line provided for treasury stock, report the cost of capital stock issued by the forwarder and reacquired by it and not retired or canceled.

(n) On the line provided for proprietary equity, individual proprietors or partnerships shall report their equity in the company and leave blank those lines pertaining to stockholder equity.

Schedule B–2—Notes to Balance Sheet. This schedule shall be filed annually by each Level 1 and Level 2 forwarder and shall set forth all substantive matters which may materially influence interpretations or conclusions in regard to the financial condition of the forwarder which are not clearly identified in the body of the balance sheet. Items set forth in this schedule shall be appropriately cross referenced to the balance sheet account affected.

Schedule G—Corporate and Securities Data. (a) This schedule shall be filed annually by each Level 1 and Level 2 forwarder for each corporate entity holding air freight forwarder operations. If the forwarder is a partnership or single proprietorship, report the indicated data for all partners or proprietor as appropriate.

(b) This schedule is divided into three parts, Part I—"Corporate and Securities Data," Part II—"General Officers and Directors," and Part III—"Listing of Stockholders."

(c) In the "Corporate and Securities" part, report the indicated data in the spaces provided. If the indicated data for any line is not applicable, put N/A in the space provided.

(d) In the "General Officers and Directors" part, report the indicated data in the appropriate column.

(e) In the "Listing of Stockholders" part, report the indicated data in the appropriate column for each person holding in excess of 5 percent of total outstanding capital.

Schedule P–1—Income Statement. (a) This schedule shall be filed annually by Level 1 forwarders and shall reflect the results of domestic, international and system operations of the reporting forwarders.

(a) The revenues generated and the expenses incurred shall be reported in conformity with the classifications established in Sections 6 and 7 of this part.

(c) On this schedule, the terms operating revenues and operating expenses shall encompass the air freight forwarding operations and the air freight related activities of the reporting forwarder. All other activities shall be reported net as nonoperating income or expense.

(d) Column (1) "Domestic" shall reflect the results of domestic operations, column (2) "International" shall reflect the results of international operations, and column (3) shall reflect the sum of both domestic and international operations.

(e) Columns (1) and (2) shall be completed down through the determination of operating profit or loss and column (3) should be completed down through the determination of net profit or loss on line 9999.

(f) The net profit or loss shall be entered as net income in the retained earnings section of the schedule. The retained earnings at the end of the period shall be carried forward to the balance sheet.

Schedule P–1(A)—Summary Income Statement. (a) This schedule shall be filed annually by Level 2 forwarders and shall reflect the results of domestic, international, and system operations of the reporting forwarder.

(b) On this schedule, the terms operating revenues and operating expenses shall encompass the air freight forwarding operations and the air freight related activities of the reporting forwarder.

(c) On this schedule operating revenues will be subdivided into four subclassifications entitled transportation revenues, accessorial and incidental revenues, and IATA Commissions.

(d) Column (1) "Domestic" shall reflect the results of domestic operations, column (2) "International" shall reflect the results of international operations, and column (3) shall reflect the sum of both domestic and international operations.

(e) Columns (1) and (2) shall be completed down through the determination of operating profit or loss and column (3) should be completed down through the determination of net profit or loss on line 9999.

Schedule P–2—Notes to Income Statement. This schedule shall be filed annually by each Level 1 and Level 2 forwarder and shall set forth all substantive matters which may materially influence interpretations or conclusions in regard to the financial condition of the forwarder which are not clearly set forth in the body of the income statement. Extraordinary Items, if any, shall be clearly and completely described. Items set forth in this schedule shall be appropriately cross referenced to the income statement account affected.

Schedule T–1—Operating Statistics Schedule. (a) This schedule shall be filed annually by each Level 1 and Level 2 forwarder.

(b) On this schedule forwarders shall report in columns (1) through (6) the number of consolidations and the weight of consolidations tendered to each group of direct carriers listed on lines 1 through 7, consolidations moved by surface in lieu of air on line 8 and the reporting forwarders portion of joint loads tendered to other forwarders on line 9. The number of joint-load consolidations physically tendered to direct carriers by the reporting forwarder shall be disclosed as a footnote on this schedule and shall not be included on lines 1 through 9.

(c) The data described in paragraph (b) above shall be provided for the domestic entity in columns (1) and (2), and for the international entity in columns (3) and (4). The system data which is the sum of data reported for international and domestic operations shall be reported in columns (5) and (6).

(d) In column (7) report the cost of transportation purchased for each classification of air carriers listed and surface in lieu of air; and the reporting forwarders portion of transportation costs for joint-load consolidations.

(e) The data reported in each column shall be totaled on line 10.

(f) In the section of this schedule entitled "Other Services" report the number of consolidations and the weight of consolidations tendered as IATA Agent and the indicated data for other consolidations handled in an agency capacity.

(g) For the purposes of this report, a consolidation shall be regarded as one or more shipments tendered to a direct carrier at one time in one place. Movements on military aircraft shall not be reported on this schedule.

(h) If the forwarder has no operations to report on lines 1 through 9, an "x" shall be placed in the box next to the words "no operations" and Schedules T–2a and T–3 need not be filed.

Schedule T–2a—Origin Station Report. (a) This schedule shall be filed annually by each Level 1 and Level 2 forwarder for the system or overall operations of the reporting forwarder.

(b) Forwarders shall list their top 20 air origin stations in the station column and complete the indicated data for each station listed individually and all other stations in the aggregate.

(c) The top 20 stations shall be determined on the basis of traffic received from customers and shall be listed in descending order.

(d) For each station listed in column (1), and all other stations in the aggregate, forwarders shall report the number of shipments received from customers and the weight of those shipments in columns (2) and (3), respectively.

(e) For each station listed in column (1), and all other stations in the aggregate, forwarders shall report the weight of traffic received from other stations for on-forwarding in column (4).

(f) For each station listed in column (1), and all other stations in the aggregate, forwarders shall report the number of consolidations tendered to direct car-

riers in column (5). Do not include joint-loaded consolidations in this figure.

(g) For each station listed in column (1), and for all other stations in the aggregate, report the weight of the consolidations tendered to direct carriers on line A in column (6) and the weight of the reporting forwarders traffic tendered to other forwarders for joint-loading on line B in column (6).

(h) For the purposes of this report, a consolidation shall be regarded as one or more shipments tendered to a direct carrier at one time at one place. This schedule shall include surface movements in lieu of air but shall not include IATA traffic handled as agent, other movements handled as agent, or movements on military aircraft.

Schedule A–3—Traffic Flow Report. (a) This schedule shall be filed by each Level 1 and Level 2 forwarder for Domestic and International Operations.

(b) In the Domestic section of this schedule, forwarders shall report in descending order in columns (1) and (2) the ten pairs of air stations representing the largest directional traffic flow in one direction. The weight of the traffic in pounds shall be reported in column (3).

(c) If no domestic operations are conducted during the calendar year, an "x" shall be placed in the box next to the words "no operations."

(d) In the International section of this schedule forwarders shall report in descending order in columns (1) and (2) the ten pairs of air stations representing the largest directional traffic flow in one direction. The weight of the traffic in pounds shall be reported in column (3).

(e) If no international operations are conducted during the calendar year an "x" shall be placed in the box next to the words "no operations."

(f) This schedule shall not include operations as an agent of a shipper or a direct air carrier or movements abroad military aircraft.

Schedule T–4—Originating Air Station Data.

* * * * *

B. By deleting everything in section 8 subsequent to the conclusion of reporting instructions for Schedule T–6.

4. Amend Section 9—Filing of Reports by Foreign Air Freight Forwarders as follows:

A. By amending the list of schedules to read as follows:

Schedule No.	Title	Filing requency
A	Certification	Annually.
T–2a	Origin Station Report	Do.
T–3	City-Pair Traffic Flow Report.	Do.

B. By amending the title of § 9–1 Reporting Instructions and dividing § 9–1 into two parts so that the new § 9–1 General Reporting Instructions and the new § 9–2 Specific Reporting Instructions read:

§ 9–1 General Reporting Instructions.

(a) Blank copies of all of the schedules contained in this section will be supplied annually by the Civil Aeronautics Board.

(b) Each schedule contains a five-block carrier code and a four-block date code. The five-block carrier code is the same code currently in use for reports filed under Part 239 of the Board's Economic Regulations. The four-block date code will be used to record the year and the month, the first two blocks representing the year and the second two blocks representing the number of the month in the calendar year. Thus, the reports filed for the year ending December 31, 1976, will be recorded as 7612. Both the carrier code and the date code shall be completed in the spaces provided on each form filed.

§ 9–2 Specific Reporting Instructions.

Schedule A—Certification. This certification shall be filed as part of this report and shall be signed on the original copy by the chief accounting officer and it shall apply and be attached to each set of schedules required to be filed as part of this report at such time as set forth in these reporting instructions.

Schedule T–2a—Origin Station Report. (a) An Origin Station Report shall be filed annually for air freight outbound from the continental United States, Alaska and/or Hawaii by each foreign air freight forwarder.

(b) If the foreign air freight forwarder had no air freight outbound from the continental United States, Alaska, or Hawaii during the calendar year, the words "no operations" should be inserted in column (1).

(c) Foreign air freight forwarders shall list the top ten air stations in terms of pounds received from customers in the station column and complete the indicated data for each station listed individually and all other stations in the aggregate. If the foreign forwarder does not serve ten stations, only those stations served shall be reported.

(d) For each station listed in column (1) and all other stations in the aggregate, the foreign forwarders shall report the number of shipments received from customers and the weight of those shipments in columns (2) and (3), respectively.

(e) For each station listed in column (1) and all other stations in the aggregate, forwarders shall report the number of consolidations tendered to direct carriers in column (5). Do not include joint-loaded consolidations in this figure.

(f) For each station listed in column (1) and all other stations in the aggregate, report the weight of consolidations tendered to direct carriers on line A of column (6) and the weight of the reporting forwarders traffic tendered to other forwarders for joint-loading on line B in column (6).

(g) Foreign forwarders shall report the number of joint-load consolidations physically tendered to direct carriers by the reporting forwarder as a footnote on this schedule.

(h) This schedule shall not include IATA traffic handled as agent.

Schedule T–3—Traffic Flow Report. (a) A City-Pair Traffic Flow Report shall be filed annually for freight outbound from the continental United States, Alaska, or Hawaii by each foreign air freight forwarder.

(b) Foreign air freight forwarders shall complete the International Section of this schedule.

(c) In the International Section of this schedule foreign forwarders shall report in descending order in columns (1) and (2), the ten pairs of air stations representing the largest directional traffic flow in one direction. The weight of the traffic shall be reported in column (3). This shall not pertain to traffic between two points outside the continental United States, Alaska, or Hawaii. One point should be a United States point.

(d) If no operations were conducted during the calendar year an "x" shall be placed in the box next to the words "no operations."

(e) The data reported shall not include IATA traffic handled as agent.

C. By changing the current § 9–2 to § 9–3 and amending it to read as follows:

§ 9–3 Due Dates of reports filed by foreign air freight forwarders.

(a) Schedules required by this section shall be filed with the Civil Aeronautics Board by February 15 of each year. If this date falls on a Saturday, Sunday, or national holiday, the reports will be due the first following workday.

(b) All reports shall be addressed as follows:

Bureau of Accounts and Statistics, Reports Control and Administration Division, B–46, Civil Aeronautics Board, Washington, D.C. 20428.

5. Amend CAB Form 244 schedules to reflect the foregoing changes in reporting instructions as shown in Exhibits A through L attached hereto and made a part hereof.[*]

(Secs. 204(a), 407, Federal Aviation Act of 1958, as amended, 72 Stat. 743, 766 (49 U.S.C. 1324, 1377))

By the Civil Aeronautics Board.

[SEAL] EDWIN Z. HOLLAND, *Secretary.*

[FR Doc.76–5235 Filed 2–23–76;8:45 am]

Title 16—Commercial Practices

CHAPTER II—CONSUMER PRODUCT SAFETY COMMISSION

[FF 3–71]

PART 1615—STANDARD FOR THE FLAMMABILITY OF CHILDREN'S SLEEPWEAR: SIZES 0 THROUGH 6X

Corrections

In this notice the Consumer Product Safety Commission makes editorial corrections in 16 CFR Part 1615, the Standard for the Flammability of Children's Sleepwear: Sizes 0 through 6x (FF 3–71).

The Standard as amended was published on July 21, 1972 (37 FR 14624) and corrected on September 21, 1972 (37 FR 19662). On December 30, 1975 (40 FR

[*] Exhibits A through L filed as part of the original document.

59903), the Consumer Product Safety Commission codified the Standard at 16 CFR Part 1615. In the process of the codification, the Commission inadvertently published in section 1615.4 (40 FR 59905 through 59910) obsolete Engineering Drawings Nos. 1 through 6. Therefore, in this notice the Commission publishes the correct Engineering Drawings Nos. 1 through 6 as found in the Standard, as amended, published on July 21, 1972. The drawings published in this notice replace those found at 40 FR 59905 through 59910.

Therefore, the following Engineering Drawings Nos. 1 through 6 are published for inclusion in 16 CFR 1615.4:

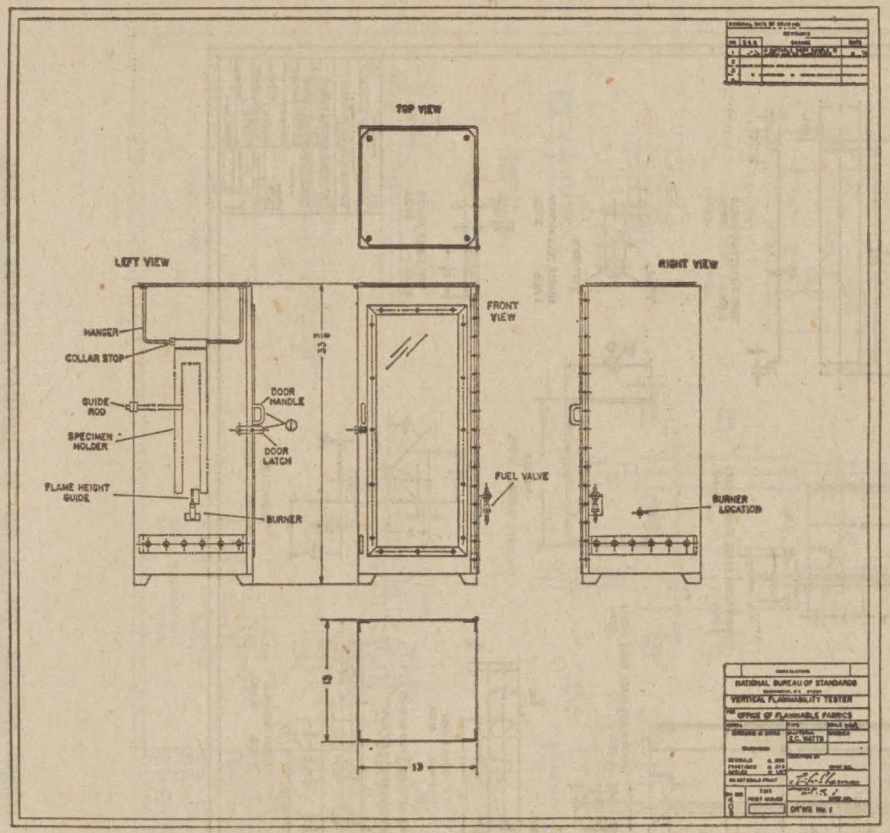

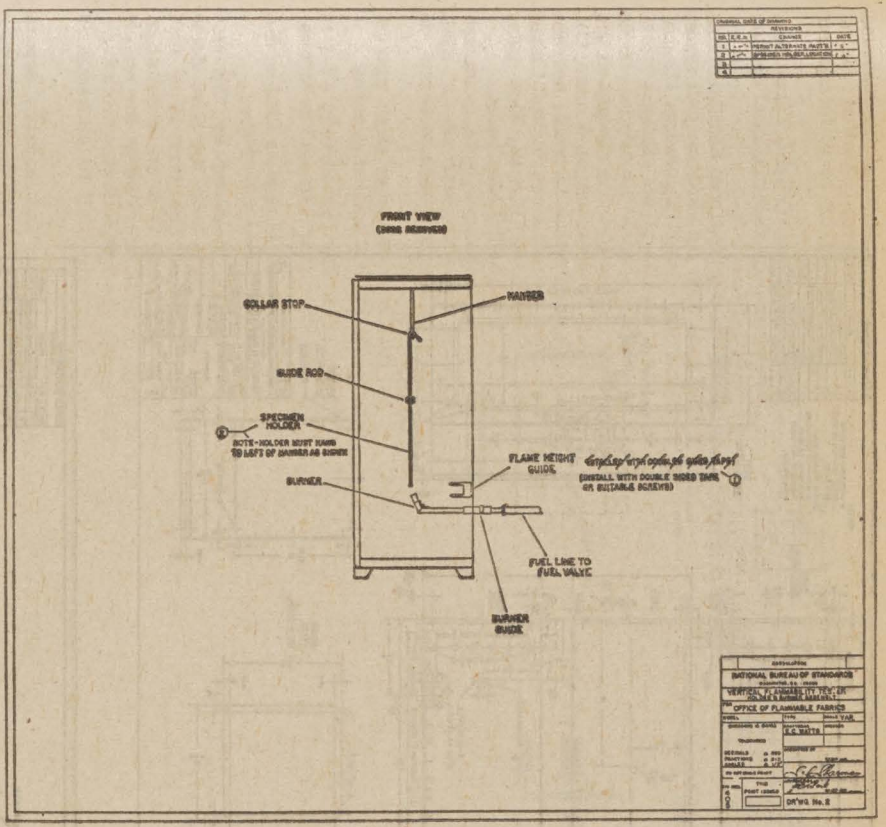

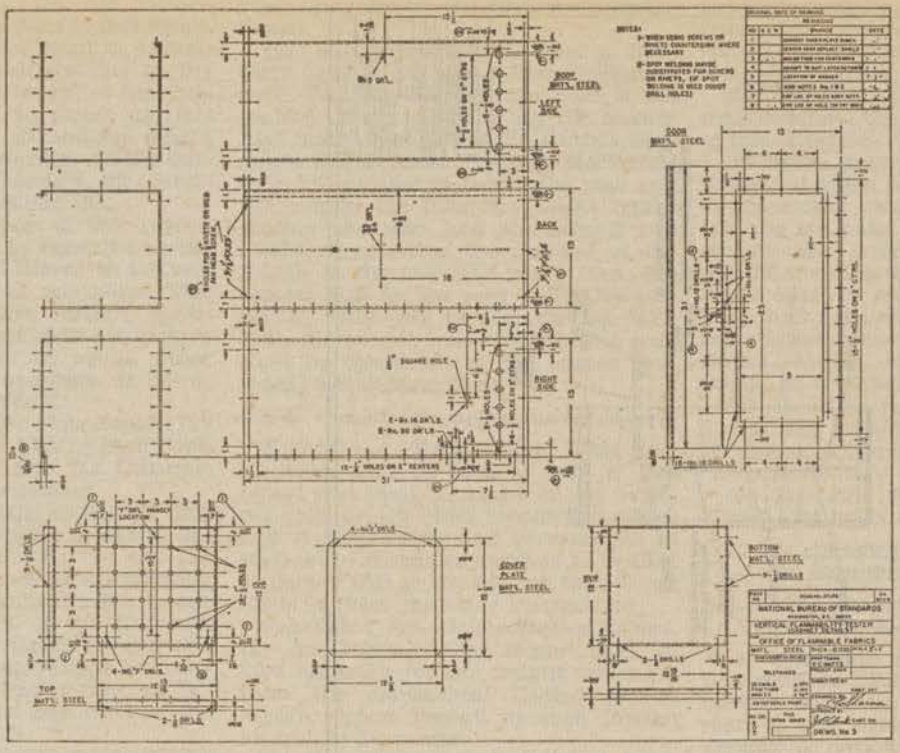

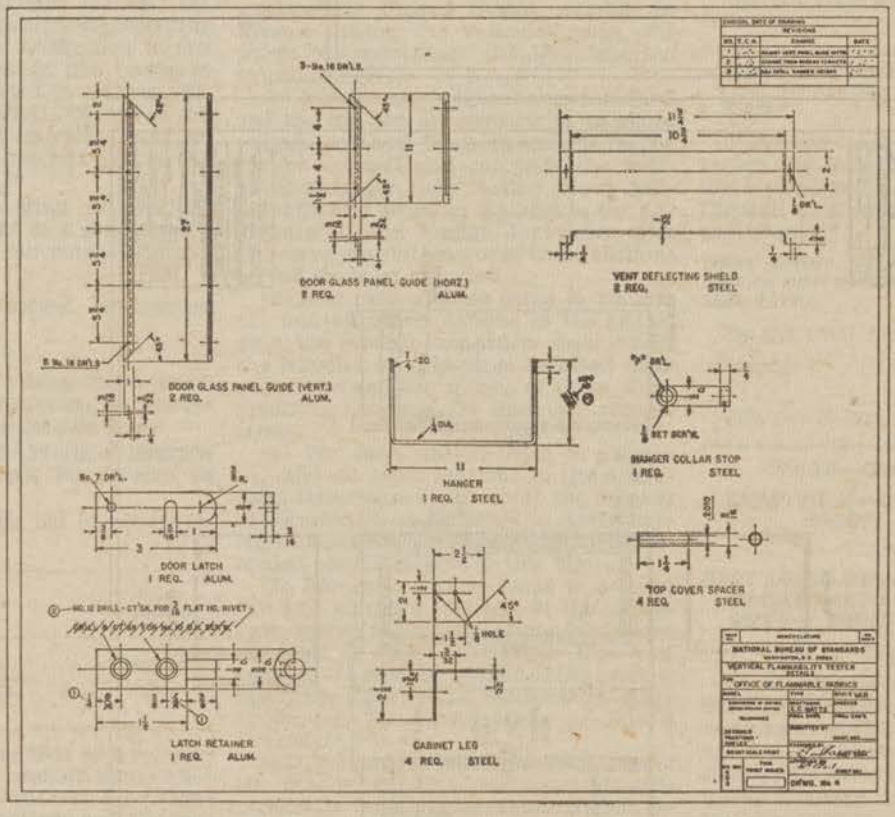
DOOR GLASS PANEL GUIDE (HORZ.)
2 REQ. ALUM.
VENT DEFLECTING SHIELD
2 REQ. STEEL
DOOR GLASS PANEL GUIDE (VERT.)
2 REQ. ALUM.
HANGER
1 REQ. STEEL
HANGER COLLAR STOP
1 REQ. STEEL
DOOR LATCH
1 REQ. ALUM.
TOP COVER SPACER
4 REQ. STEEL
LATCH RETAINER
1 REQ. ALUM.
CABINET LEG
4 REQ. STEEL

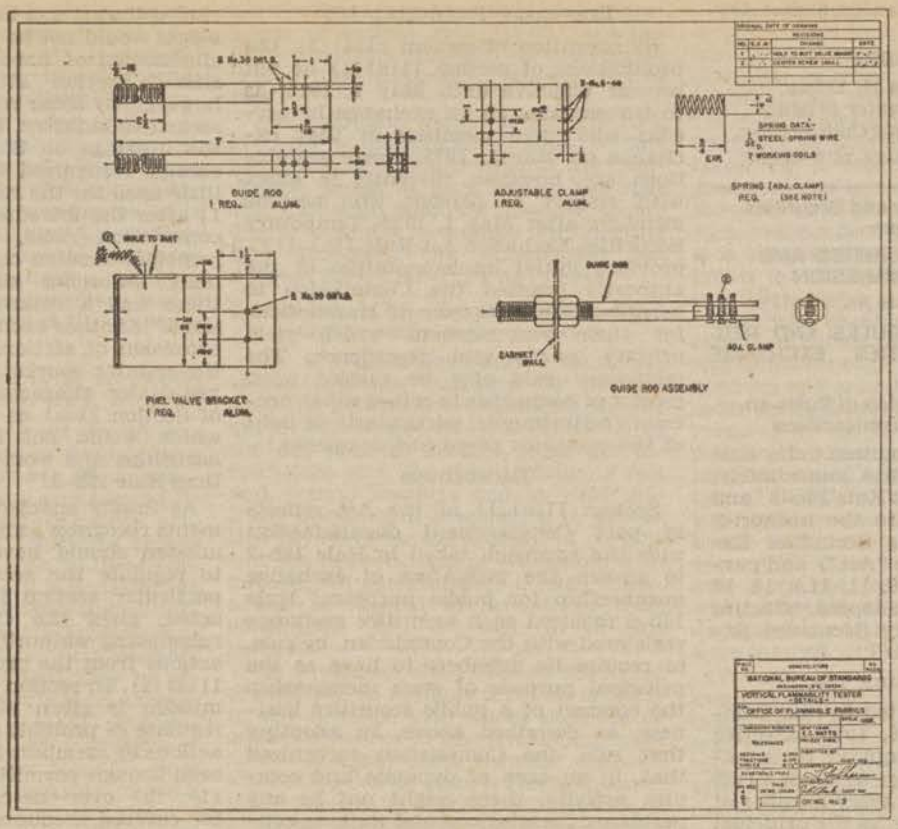
GUIDE ROD
1 REQ. ALUM.
ADJUSTABLE CLAMP
1 REQ. ALUM.
SPRING DATA
STEEL SPRING WIRE
7 WORKING COILS
SPRING (ADJ. CLAMP)
REQ.
FUEL VALVE BRACKET
1 REQ. ALUM.
GUIDE ROD ASSEMBLY
NATIONAL BUREAU OF STANDARDS
VERTICAL FLAMMABILITY TESTER
DETAILS
OFFICE OF FLAMMABLE FABRICS

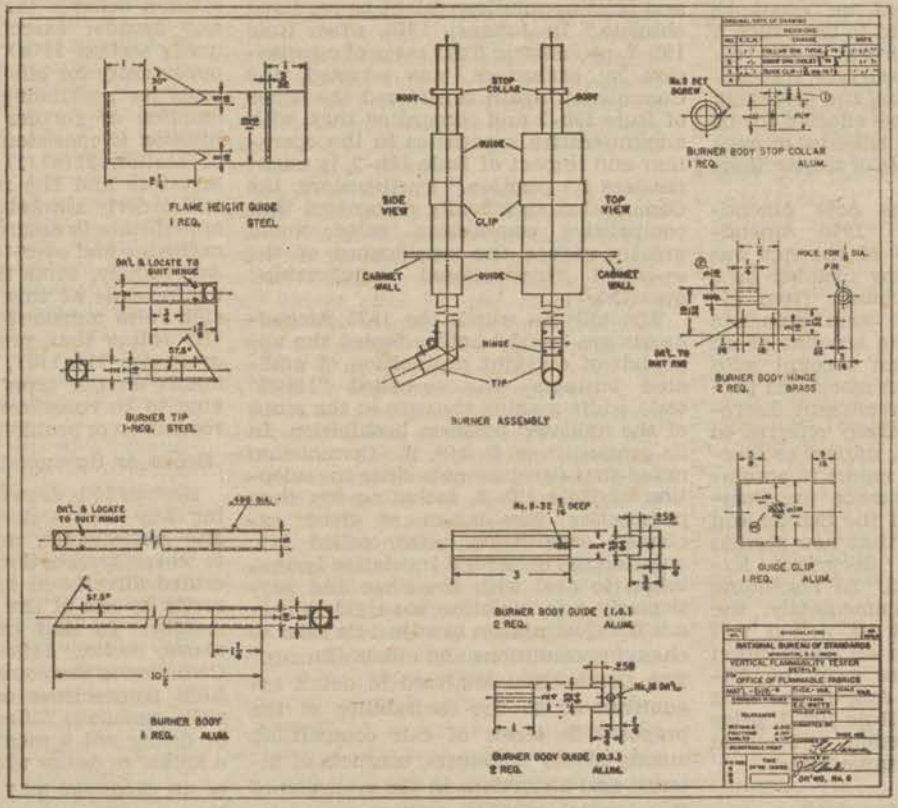
FLAME HEIGHT GUIDE
1 REQ. STEEL
BURNER TIP
1 REQ. STEEL
BURNER ASSEMBLY
SIDE VIEW
TOP VIEW
BODY
STOP COLLAR
GUIDE
CLIP
CABINET WALL
HINGE
TIP
BURNER BODY STOP COLLAR
1 REQ. ALUM.
BURNER BODY HINGE
2 REQ. BRASS
GUIDE CLIP
1 REQ. ALUM.
BURNER BODY
1 REQ. ALUM.
BURNER BODY GUIDE (L.S.)
2 REQ. ALUM.
BURNER BODY GUIDE (R.S.)
2 REQ. ALUM.
NATIONAL BUREAU OF STANDARDS
VERTICAL FLAMMABILITY TESTER
DETAILS
OFFICE OF FLAMMABLE FABRICS

(Sec. 4, 67 Stat. 112, as amended, 81 Stat. 569–70 (15 U.S.C. 1193))

Dated: February 17, 1976.

SADYE E. DUNN,
Secretary, Consumer Product Safety Commission.

[FR Doc.76–5021 Filed 2–23–76;8:45 am]

Title 17—Commodity and Securities Exchanges

CHAPTER II—SECURITIES AND EXCHANGE COMMISSION

[Release 34–12055; File No. S7–613]

PART 240—GENERAL RULES AND REGULATIONS, SECURITIES EXCHANGE ACT OF 1934

Rescission and Adoption of Rules on Certain Exchange Transactions

The Commission announced today that it has rescinded, effective immediately, Securities Exchange Act Rule 19b–2 [1] and that, acting pursuant to the authority vested in it under the Securities Exchange Act of 1934 (the "Act") and particularly sections 2, 3, 6, 11, 11A, 15, 19 and 23 thereof,[2] it has adopted, effective immediately, Temporary Securities Exchange Act Rule 11a1–1(T).

RESCISSION OF RULE 19B–2

Rule 19b–2 was adopted by the Commission on January 16, 1973, effective March 15, 1973.[3] It required each national securities exchange to adopt a rule or rules specifying that every member of the exchange must have, as the principal purpose of its exchange membership, the conduct of a public securities business. The Rule specified that an exchange member would be deemed to have such a purpose if at least 80 percent of the volume of its exchange securities transactions effected by it during the preceding six calendar months were effected for or with persons other than affiliates or were effected pursuant to types of transactions specified in the rule.

Under the Securities Acts Amendments of 1975, (the "1975 Amendments"),[4] section 11(a) of the Act was amended to prohibit any member of a national securities exchange from effecting transactions on such exchange for its own account, the account of an associated person, or an account with respect to which it or an associated person thereof exercises investment discretion (hereinafter collectively referred to as "covered accounts"), subject to specified exceptions.[5] In its report to accompany the 1975 Amendments, the Committee of Conference of the Senate and the House made clear that new section 11(a) would displace Securities Exchange Act Rule 19b–2.[6] In rescinding Rule 19b–2 effective immediately, the Commission finds that its action will not impose any burden on competition and that, in accordance with the Administrative Procedure Act,[7] notice with respect to rescission of Rule 19b–2, prior to the Commission's action, and public procedure thereon, are unnecessary.

TEMPORARY RULE 11a1–1(T)

By operation of section 11(a)(3), the prohibitions of section 11(a)(1) do not become effective until May 1, 1978, as to transactions on an exchange by persons who were members of that exchange on May 1, 1975; those prohibitions are, however, currently in effect with respect to persons who became members after May 1, 1975. Temporary Securities Exchange Act Rule 11a1–1(T) provides initial implementation of the authority granted the Commission to permit members to execute transactions for their own account which yield priority, parity and precedence. The temporary rule may be revised upon receipt of comments to reflect other necessary adjustments, particularly in light of the questions posed in this release.[8]

BACKGROUND

Section 11(a)(1) of the Act reflects in part Congressional dissatisfaction with the approach taken in Rule 19b–2 to govern the utilization of exchange membership for public purposes.[9] Rule 19b–2 required each securities exchange registered with the Commission, by rule, to require its members to have as the principal purpose of such membership the conduct of a public securities business, as described above. In adopting that rule, the Commission recognized that, in an area of dynamic and complex activity, there might not be any permanent resolutions and that, as conditions changed, existing problems might be superseded by new problems and existing solutions might be rendered obsolete.[10] In January 1975, when Rule 19b–3, prohibiting fixed rates of commission by exchanges, was adopted, the Commission again considered the scope of Rule 19b–2 and recognized that, with administrative experience in the operation and impact of Rule 19b–2, it might reassess its position.[11] Furthermore, the Commission specifically recognized that competitive commission rates would greatly reduce the significance of the so-called "institutional membership" question.[12]

The bills on which the 1975 Amendments are based [13] both adopted the approach of outright prohibition of affiliated business (the so-called "100–0" test) while making changes in the scope of the affiliated business prohibition. In its comments on S. 249, the Commission noted that developments since the adoption of Rule 19b–2, including the then prospective elimination of fixed exchange commission rates, called into question the need for a legislative formulation to deal with the issue and particularly a formulation too rigid to permit the Commission to adjust its rules to changing conditions and circumstances.[14] The Commission analyzed in detail arguments as to the desirability of the proposal in terms of fair competition among money managers, conflicts of interest and distortions in the evolution of the central market system and concluded that it was likely that such arguments would not be persuasive after the elimination of fixed exchange commissions.[15] Section 11(a) was supported, however, by some representatives of the securities industry. For example, during the hearings on S. 249, a leading exchange recognized that there might be little need for the restrictions of Section 11 after the introduction of competitive commission rates, but it focused its principal concern on a proposal to prohibit enforcing such restrictions if there was a return to fixed commissions.[16] Another exchange argued for the extension of section 11(a) to the over-the-counter markets.[17] A leading broker-dealer characterized the language of Section 11(a) as a workable solution which would not impose unnecessary hardships and would be more workable than Rule 19b–2.[18]

As finally enacted, the 1975 Amendments recognize generally that the Commission should have flexible authority to regulate the securities industry. In particular, section 11(a)(1)(H), as enacted, gives the Commission plenary rulemaking authority to exempt transactions from the prohibitions of section 11(a)(1). In section 11(a)(2), the Commission is given plenary authority to regulate or prohibit (a) exchange transactions by members for covered accounts even though permitted by section 11(a)(1), (b) over-the-counter transactions for covered accounts and (c) exchange transactions by non-members for covered accounts. Nevertheless, the Commission believes that before attempting any broader exercise of its authority under section 11(a) there should be an opportunity for public exploration of the basis for concluding that any such exemption or further regulation or prohibition is consistent with the purposes of section 11(a)(1), the protection of investors and the maintenance of fair and orderly markets, or is necessary or appropriate to assure equal regulation of exchange and over-the-counter markets. Accordingly, while the Commission does not propose at this time to adopt specific rules pursuant to section 11(a)(1)(H) (other than proposed Rule 11a1–2) or section 11(a)(2), it is soliciting comments on the types of transactions, if any, to be considered for exemption or regulation or prohibition.[19]

SCOPE OF SECTION 11(a) PROHIBITIONS

Section 11 is drawn in terms of "effecting any transaction" on an exchange and consequently might be interpreted to cover transactions by members executed directly on an exchange or indirectly by use of the services of another member. In that connection, as noted above, section 11(a)(2)(C) grants the Commission the power to regulate or prohibit transactions on a national securities exchange "effected" by any broker or dealer not a member thereof.[20] Since a broker or dealer which is not a member of an exchange may "effect" a transaction on the exchange by utilizing the

[1] See foonotes at end of document.